Cambridge Assessment International Education

Cambridge IGCSE™

PHYSICS **0625/22**

Paper 2 Multiple Choice (Extended) **October/November 2023**

45 minutes

You must answer on the multiple choice answer sheet.

You will need: Multiple choice answer sheet
Soft clean eraser
Soft pencil (type B or HB is recommended)

INSTRUCTIONS

- There are **forty** questions on this paper. Answer **all** questions.
- For each question there are four possible answers **A**, **B**, **C** and **D**. Choose the **one** you consider correct and record your choice in soft pencil on the multiple choice answer sheet.
- Follow the instructions on the multiple choice answer sheet.
- Write in soft pencil.
- Write your name, centre number and candidate number on the multiple choice answer sheet in the spaces provided unless this has been done for you.
- Do **not** use correction fluid.
- Do **not** write on any bar codes.
- You may use a calculator.
- Take the weight of 1.0 kg to be 9.8 N (acceleration of free fall = 9.8 m / s^2).

INFORMATION

- The total mark for this paper is 40.
- Each correct answer will score one mark.
- Any rough working should be done on this question paper.

This document has **16** pages. Any blank pages are indicated.

© UCLES 2023

1 Which quantity is a scalar quantity?

View solution

A acceleration

B force

C time

D velocity

2 A student measures the average speed of a cyclist in a race.

View solution

Which quantities must she measure?

A the total time taken to complete the race and the time taken for the cyclist to reach her highest speed

B the total time taken to complete the race and the total distance travelled by the cyclist at her highest speed

C the total time taken to complete the race and the total distance travelled by the cyclist

D the time taken to reach her highest speed and the total distance travelled by the cyclist

3 The diagram shows a series of images of a moving object taken at regular intervals.

View solution

The object is moving from left to right.



Which statement describes the motion of the object?

A The object accelerates continuously.

B The object decelerates continuously.

C The object travels at constant speed and then accelerates.

D The object travels at constant speed and then decelerates.

4 A plastic ball has a mass of 4.0 g and a volume of 20 cm^3.

View solution

There is a crack in the ball's surface.

The ball is placed in a bath of water. Water leaks into the ball without changing the volume of the ball and eventually the ball sinks.

The density of water = 1.0 g / cm^3.

Which mass of water has entered the ball when the top of the ball is first level with the water surface?

A 5.0 g **B** 16 g **C** 20 g **D** 24 g

© UCLES 2023

5 A satellite orbits the Earth at constant speed in a circular orbit.

View solution

Which statement is correct?

A The resultant force on the satellite is zero.

B The resultant force on the satellite is towards the Earth.

C The resultant force on the satellite is away from the Earth.

D The resultant force on the satellite is in the direction of its motion.

6 The diagrams show four identical objects. Each object is acted on by only the forces shown.

View solution

Which diagram shows an object in equilibrium?

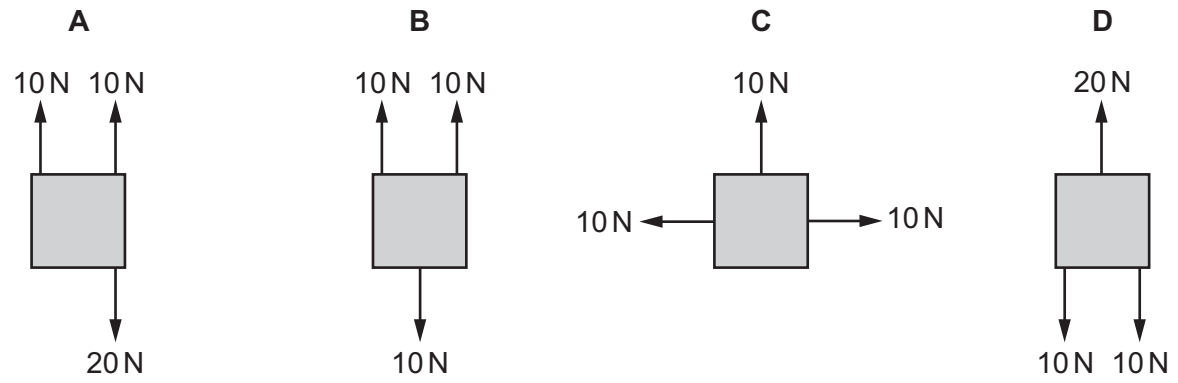

7 A resultant force F accelerates a car of mass m along a straight horizontal road from rest to a speed v in time t, giving it momentum p.

View solution

Which pair of relationships for this situation is correct?

A $pt = mv$ and $F = pt$

B $p = mv$ and $F = pt$

C $p = mv$ and $Ft = p$

D $p = mvt$ and $Ft = v$

8 The diagram shows part of a rollercoaster ride with the car at different positions.

View solution

The car runs freely down from position X to position Y and up the hill on the other side.

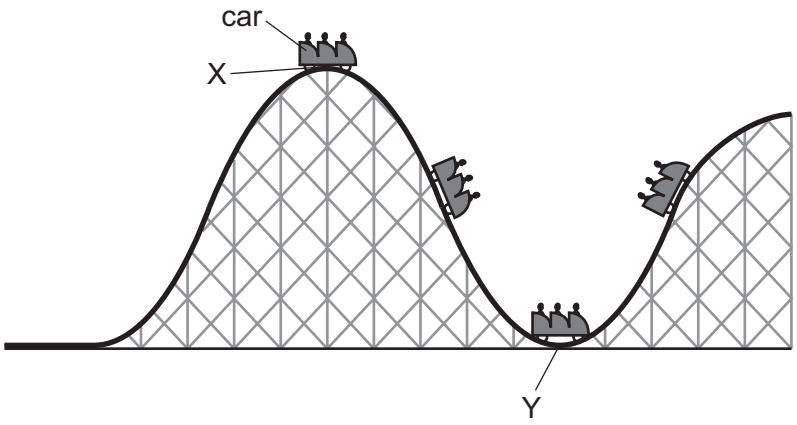

What happens to the energy in the kinetic store and the gravitational potential store of the car as it moves from position X to position Y?

	energy in kinetic store	energy in gravitational potential store
A	decreases	decreases
B	decreases	increases
C	increases	decreases
D	increases	increases

9 A box is initially at rest at the top of a rough slope.

View solution

The box slides down the slope.

The weight of the box is 20 N.

The slope is 4.0 m long and 2.0 m high.

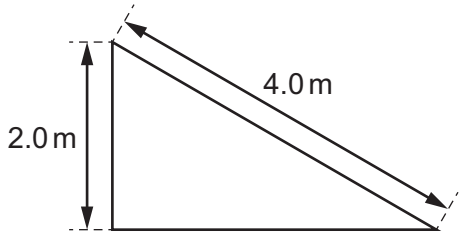

The box does 10 J of work against friction as it slides down the slope.

What is the speed of the box as it reaches the bottom of the slope?

A 5.4 m / s **B** 6.3 m / s **C** 7.1 m / s **D** 9.5 m / s

© UCLES 2023

10 An electric car is charged overnight. In 8.0 hours, 180 MJ of energy is transferred.

View solution

What is the power of the charger?

A 6.3 kW **B** 380 kW **C** 23 MW **D** 1400 MW

11 An object is a depth h below the surface of a liquid. The pressure due to the liquid at this depth is p. The gravitational field strength is g.

View solution

What is the density ρ of the liquid?

A $\rho = pgh$ **B** $\rho = \frac{pg}{h}$ **C** $\rho = \frac{ph}{g}$ **D** $\rho = \frac{p}{hg}$

View solution

12 Brownian motion is the random motion of particles.

In which states of matter is Brownian motion observed?

A gases, liquids and solids

B gases and liquids only

C gases and solids only

D liquids and solids only

View solution

13 The volume of a fixed mass of gas is varied. The temperature remains constant.

Which graph shows how the pressure p of the gas varies with volume V?

A

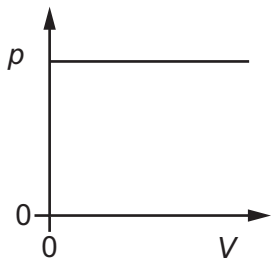

B

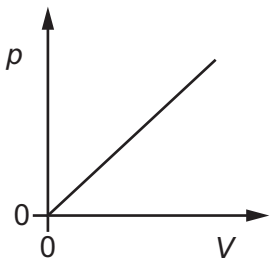

C

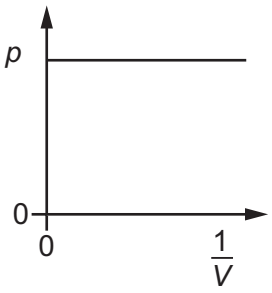

D

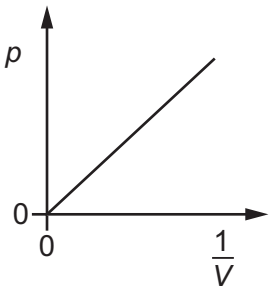

14 Liquid evaporates from a beaker.

What happens to the temperature of the remaining liquid and how does this temperature change affect the rate of evaporation?

View solution

	temperature	rate of evaporation
A	decreases	decreases
B	decreases	increases
C	increases	decreases
D	increases	increases

15 Thermal energy ΔE is supplied to an object of mass m which does not change its state during the heating process. The temperature of the object rises by ΔT.

View solution

What is the specific heat capacity of the object?

A $\frac{\Delta E}{m\Delta T}$ **B** $\frac{m\Delta T}{\Delta E}$ **C** $\frac{\Delta E\Delta T}{m}$ **D** $\frac{\Delta Em}{\Delta T}$

16 A room is heated by a radiator. The diagrams X and Y show two possible circulations of hot air, which heat the room.

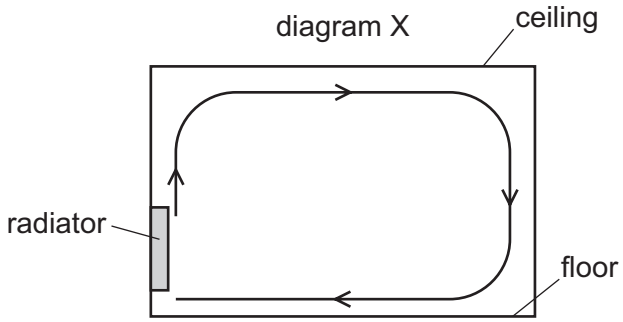

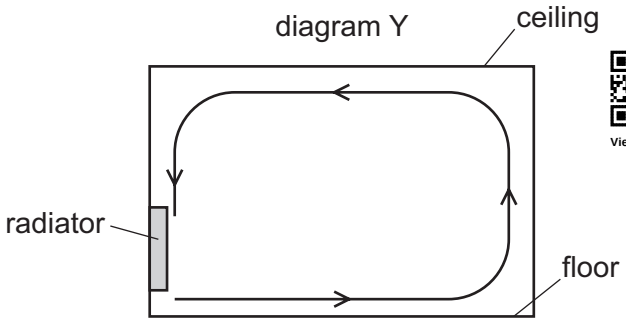

View solution

Which diagram and reason explain the heating of the room by convection?

	diagram	reason
A	X	air density decreases when air is heated
B	X	air density increases when air is heated
C	Y	air density decreases when air is heated
D	Y	air density increases when air is heated

© UCLES 2023

17 A student writes down some facts about two transverse waves.

View solution

Wave 1 has a frequency f and a velocity v.

Wave 2 has four times the frequency of wave 1 and is travelling at a velocity of $2v$.

What is the wavelength of wave 2 in terms of f and v?

A $\frac{2f}{v}$ **B** $8fv$ **C** $\frac{2v}{f}$ **D** $\frac{v}{2f}$

18 Straight wavefronts on the surface of a ripple tank approach a gap in a barrier. The diagram shows how the wavefronts change shape as they pass through the gap.

View solution

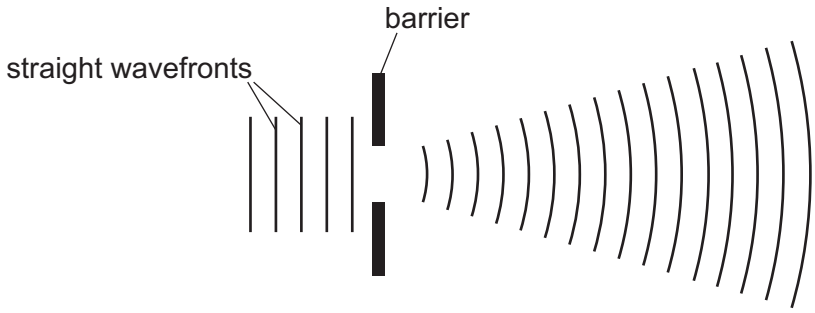

What is the name of this effect?

A diffraction

B propagation

C reflection

D refraction

19 Light travels from air into glass.

View solution

What is the relationship between the refractive index n of the glass, the angle of incidence i and the angle of refraction r?

A $n = \frac{i}{r}$ **B** $n = \frac{r}{i}$ **C** $n = \frac{\sin i}{\sin r}$ **D** $n = \frac{\sin r}{\sin i}$

© UCLES 2023

20 Which diagram shows the image correctly formed by reflection?

View solution

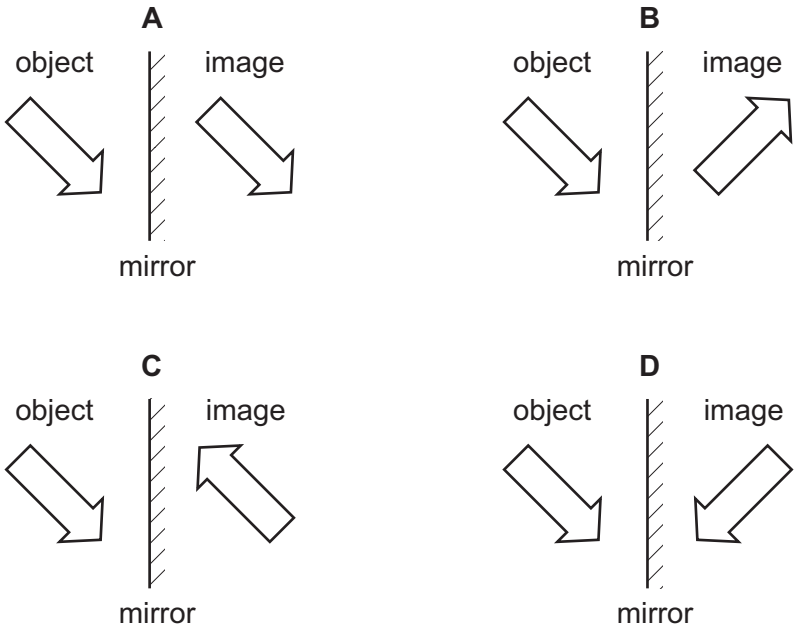

21 A student passes parallel rays of light through four different converging lenses. He measures the distance *x* and the distance *y* for each experiment.

View solution

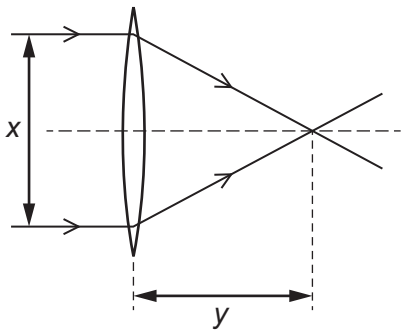

Which lens has the longest focal length?

	x / cm	*y* / cm
A	4.6	2.0
B	5.1	3.1
C	5.9	2.3
D	6.1	2.4

22 The frequency of the microwaves used in a microwave oven is 2400 MHz.

View solution

What is the wavelength of these microwaves?

A 0.125 m **B** 8.00 m **C** 125 m **D** 7200 m

© UCLES 2023

23 Which row gives typical values for the speed of sound in a solid and in a gas?

View solution

	speed of sound in a solid m / s	speed of sound in a gas m / s
A	3	30
B	30	3
C	300	3000
D	3000	300

24 A hard magnetic material can be used to make a permanent magnet.

View solution

A soft magnetic material can be used to make a temporary magnet.

Which row shows whether iron and steel are hard or soft magnetic materials?

	iron	steel
A	hard	hard
B	hard	soft
C	soft	hard
D	soft	soft

25 A power source is connected to a resistor XY.

View solution

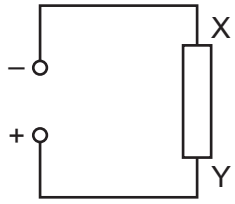

In which directions are the conventional current and the flow of free electrons through the resistor?

	conventional current	free electron flow
A	X to Y	X to Y
B	X to Y	Y to X
C	Y to X	X to Y
D	Y to X	Y to X

© UCLES 2023

26 Which unit is used to measure electromotive force (e.m.f.)?

View solution

A ampere

B joule

C volt

D watt

27 The graph shows the current–voltage characteristic for a filament lamp.

View solution

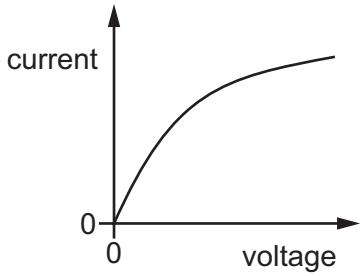

Which statement describes how the resistance of the lamp changes as the voltage increases?

A The resistance decreases to zero.

B The resistance decreases, but not to zero.

C The resistance increases.

D The resistance remains constant.

28 In the diagram, rod R is suspended from an insulating thread.

View solution

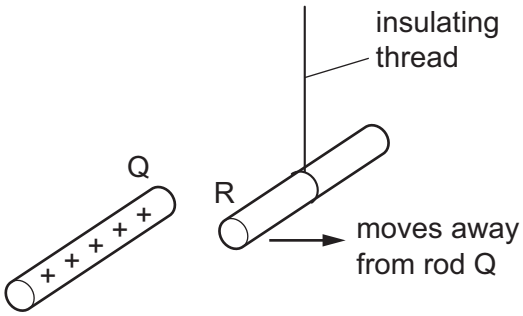

When the positively charged rod Q is brought close to rod R, rod R moves away from rod Q.

Which conclusion can be made from this observation?

A Rod R is charged, but it is not possible to identify the sign of the charge.

B Rod R must be positively charged.

C Rod R must be negatively charged.

D Rod R is uncharged.

29 The circuit diagram shows a circuit used to run a d.c. motor from an a.c. supply.

View solution

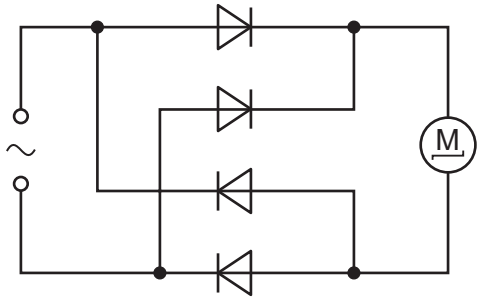

Which graph shows the current in the motor?

A

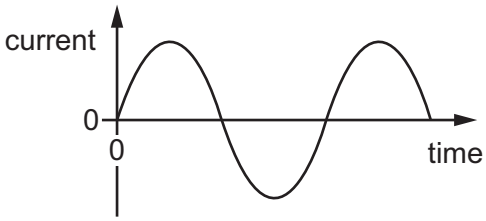

B

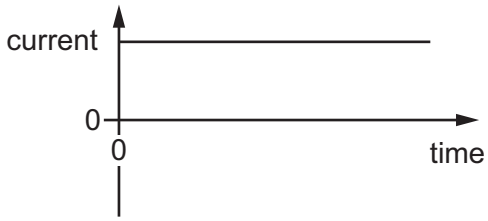

C

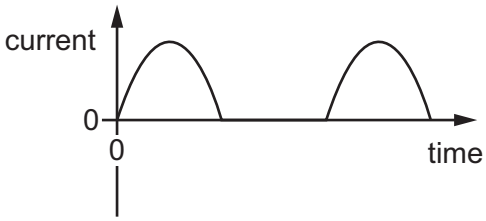

D

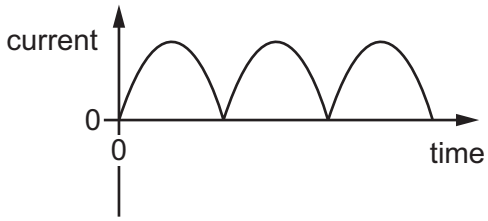

© UCLES 2023

30 The circuit shown can be completed by inserting components at X and at Y. The completed circuit is a potential divider in which the potential difference across component Y increases when the temperature increases.

View solution

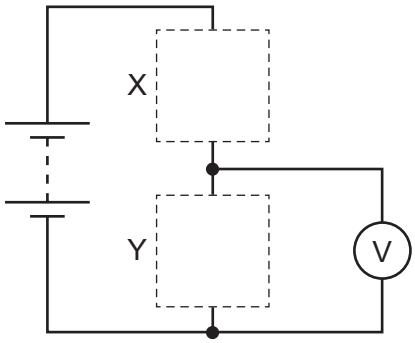

Which row shows the components X and Y?

	X	Y
A	light-dependent resistor	resistor
B	resistor	light-dependent resistor
C	resistor	thermistor
D	thermistor	resistor

31 A piece of soft iron XY has a coil of wire wound round it.

View solution

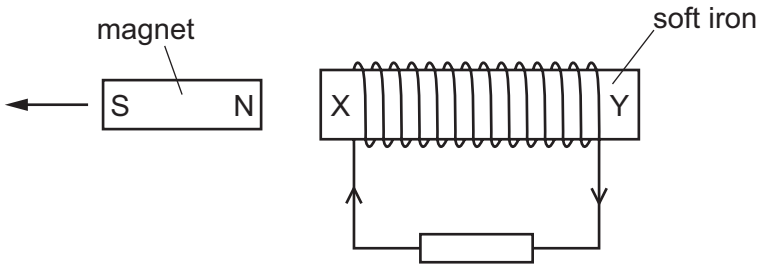

The N pole of a bar magnet is pulled away from end X which causes an induced current in the coil.

The magnet is now turned round so that the N pole is on the left. It is taken to the other end of the soft iron and the N pole is pushed towards end Y. A new current is induced in the coil.

Which statement is correct?

A The new induced current is in the opposite direction and causes the soft iron to attract the N pole.

B The new induced current is in the opposite direction and causes the soft iron to repel the N pole.

C The new induced current is in the same direction and causes the soft iron to attract the N pole.

D The new induced current is in the same direction and causes the soft iron to repel the N pole.

© UCLES 2023

32 The diagram shows a wire in the magnetic field between two poles of a magnet.

View solution

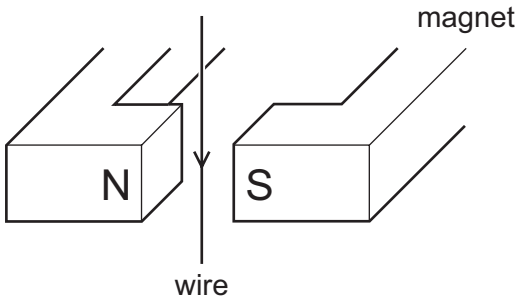

The current in the wire repeatedly changes between a constant value in one direction and a constant value in the opposite direction, as shown in the graph.

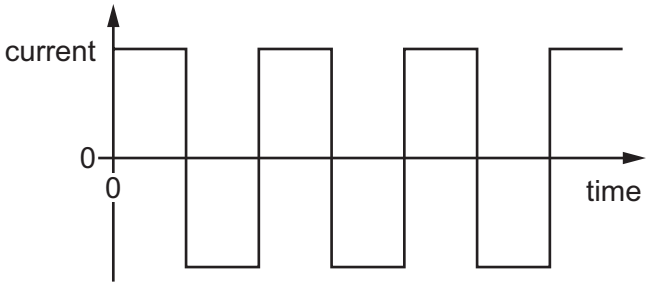

What is the effect on the wire?

A The force on the wire alternates between one direction and the opposite direction.

B The force on the wire is constant in size and direction.

C There is no force acting on the wire at any time.

D There is only a force on the wire when the current reverses.

33 A transformer has N_p turns on its primary coil and N_s turns on its secondary coil. The voltage across the primary coil is V_p and the voltage across the secondary coil is V_s.

View solution

What is the relationship between these four quantities?

A $V_p \times V_s = N_p \times N_s$

B $\frac{V_p}{V_s} = \frac{N_p}{N_s}$

C $\frac{V_p}{V_s} = \frac{N_s}{N_p}$

D $\frac{V_p}{V_s} = N_p \times N_s$

© UCLES 2023

34 A magnesium ion has a double positive charge and a chloride ion has a single negative charge.

View solution

Which statement is correct?

A A chlorine atom gains an electron to form the chloride ion.

B A chlorine atom loses a proton to form the chloride ion.

C A magnesium atom loses an electron to form the magnesium ion.

D A magnesium atom gains two electrons to form the magnesium ion.

35 Which row correctly describes an example of radioactive decay?

View solution

	original nucleus	emission	change or no change of element
A	stable	γ	change of element
B	unstable	α	change of element
C	unstable	α	no change of element
D	unstable	β	no change of element

36 A radioactive isotope of sodium has a half-life of 15 h.

View solution

The table gives data from an experiment to show how the rate of decay of the isotope varies with time.

The background count rate has not been subtracted from these data.

time / h	0	10	20	30
$\frac{\text{count rate}}{\text{counts / s}}$	400	260	170	115

What is the background radiation count rate?

A 12 counts / s

B 15 counts / s

C 20 counts / s

D 30 counts / s

37 What happens in the process of nuclear fission?

View solution

A Electrons are added to a nucleus.

B Electrons are removed from a nucleus.

C The nucleus of an atom splits.

D Two atomic nuclei join together.

© UCLES 2023

38 The time taken for the Earth to orbit the Sun is approximately 365 days.

View solution

The average radius of the Earth's orbit around the Sun is 1.5×10^8 km.

What is the average orbital speed of the Earth?

A 30 m / s

B 4.8×10^3 m / s

C 3.0×10^4 m / s

D 4.1×10^{10} m / s

39 The Sun transfers energy to the Earth through electromagnetic radiation.

View solution

What are two of the parts of the electromagnetic spectrum to which most of the energy belongs?

A gamma rays and X-rays

B infrared radiation and visible light

C microwaves and visible light

D radio waves and microwaves

40 How does the Sun produce its energy?

View solution

A by the fission of helium

B by the fission of hydrogen

C by the fusion of helium

D by the fusion of hydrogen

© UCLES 2023

BLANK PAGE

Permission to reproduce items where third-party owned material protected by copyright is included has been sought and cleared where possible. Every reasonable effort has been made by the publisher (UCLES) to trace copyright holders, but if any items requiring clearance have unwittingly been included, the publisher will be pleased to make amends at the earliest possible opportunity.

To avoid the issue of disclosure of answer-related information to candidates, all copyright acknowledgements are reproduced online in the Cambridge Assessment International Education Copyright Acknowledgements Booklet. This is produced for each series of examinations and is freely available to download at www.cambridgeinternational.org after the live examination series.

Cambridge Assessment International Education is part of Cambridge Assessment. Cambridge Assessment is the brand name of the University of Cambridge Local Examinations Syndicate (UCLES), which is a department of the University of Cambridge.

© UCLES 2023