Cambridge Assessment International Education

Cambridge IGCSE™

CANDIDATE NAME									
CENTRE NUMBER						CANDIDATE NUMBER			

PHYSICS **0625/32**

Paper 3 Theory (Core) **October/November 2023**

1 hour 15 minutes

You must answer on the question paper.

No additional materials are needed.

INSTRUCTIONS

- Answer **all** questions.
- Use a black or dark blue pen. You may use an HB pencil for any diagrams or graphs.
- Write your name, centre number and candidate number in the boxes at the top of the page.
- Write your answer to each question in the space provided.
- Do **not** use an erasable pen or correction fluid.
- Do **not** write on any bar codes.
- You may use a calculator.
- You should show all your working and use appropriate units.
- Take the weight of 1.0 kg to be 9.8 N (acceleration of free fall = 9.8 m / s^2).

INFORMATION

- The total mark for this paper is 80.
- The number of marks for each question or part question is shown in brackets [ ].

This document has **20** pages. Any blank pages are indicated.

© UCLES 2023

1 Fig. 1.1 shows the speed–time graph for a cyclist beginning a race. The motion of the cyclist changes at points A, B and C.

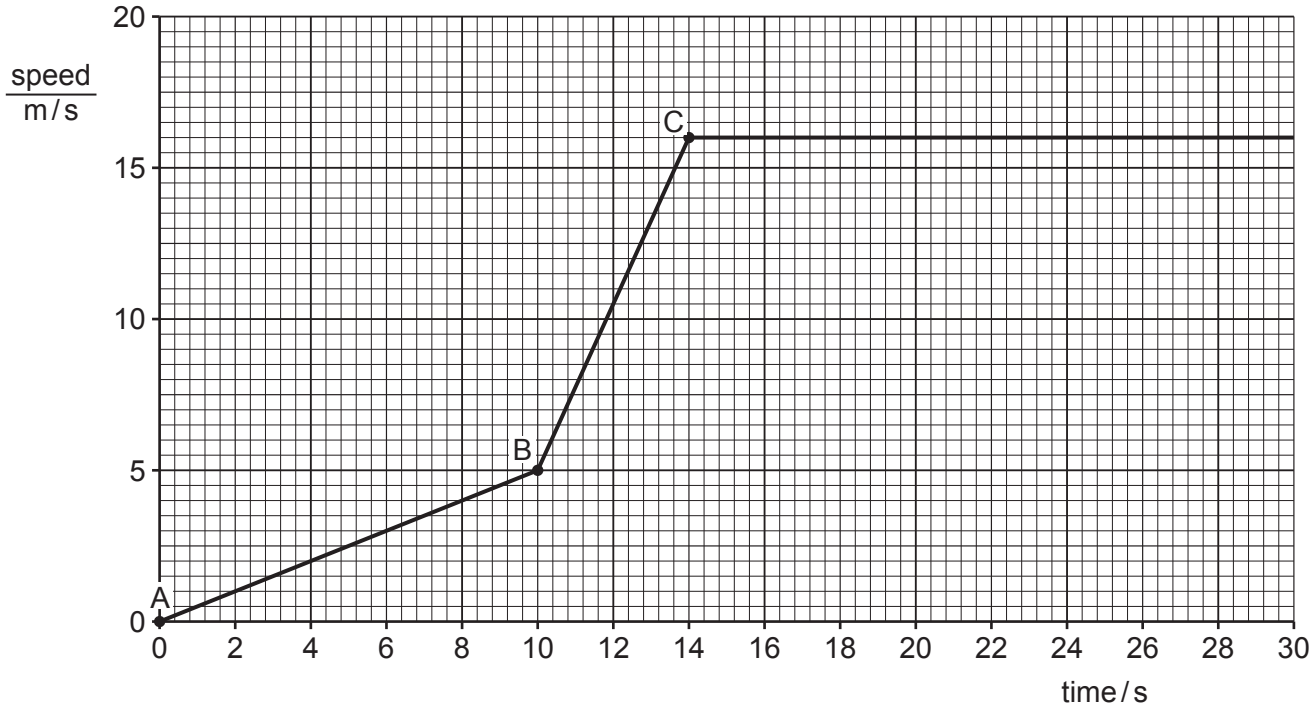

Fig. 1.1

(a) Using information from Fig. 1.1, determine:

View solution

(i) the speed of the cyclist at time = 6.0 s

speed = ... m/s [2]

(ii) the maximum speed of the cyclist.

maximum speed = ... m/s [1]

(b) **(i)** Describe the motion of the cyclist between point A and point B.

..... [1]

(ii) Describe how the motion of the cyclist between points B and C differs from the motion between points A and B.

View solution

Give a reason for your answer.

difference .....

reason .....

[2]

(c) Determine the distance travelled by the cyclist between point A and point B.

View solution

distance = ... m [3]

[Total: 9]

© UCLES 2023

2 **(a)** State the principle of conservation of energy.

..... [1]

(b) Fig. 2.1 shows the energy flow diagram for a car powered by a petrol engine.

View solution

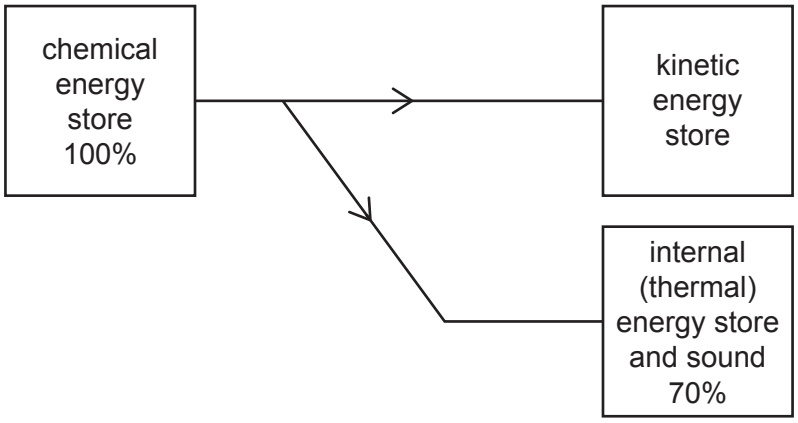

Fig. 2.1

(i) Using the information in Fig. 2.1, calculate the percentage of energy transferred from the chemical store to the kinetic store.

percentage = ... % [2]

(ii) Fig. 2.2 shows the energy flow diagram for an electric car. The electric car is driven by an electric motor which is powered by a battery.

View solution

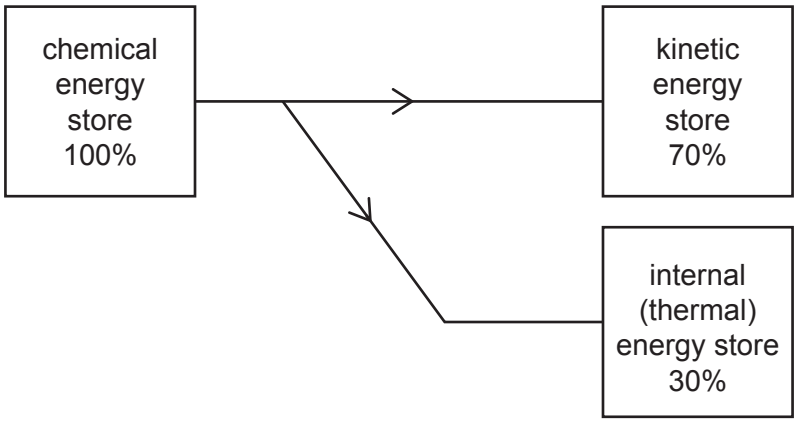

Fig. 2.2

Using the information in Fig. 2.1 and Fig. 2.2, state which car is more efficient. Give a reason for your answer.

car .....

reason .....

.....

[1]

[Total: 4]

© UCLES 2023

3 A platform rests on a pivot as shown in Fig. 3.1.

A diver sits at a distance of 1.8 m from the pivot. The weight of the diver is 1100 N.

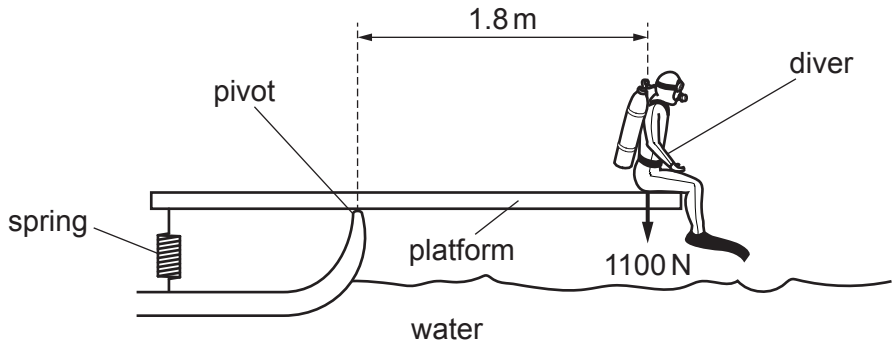

Fig. 3.1 (not to scale)

(a) Using the information in Fig. 3.1, calculate the moment of the diver about the pivot.

View solution

moment of diver = ... N m [3]

(b) (i) Fig. 3.2 represents the platform without the diver.

View solution

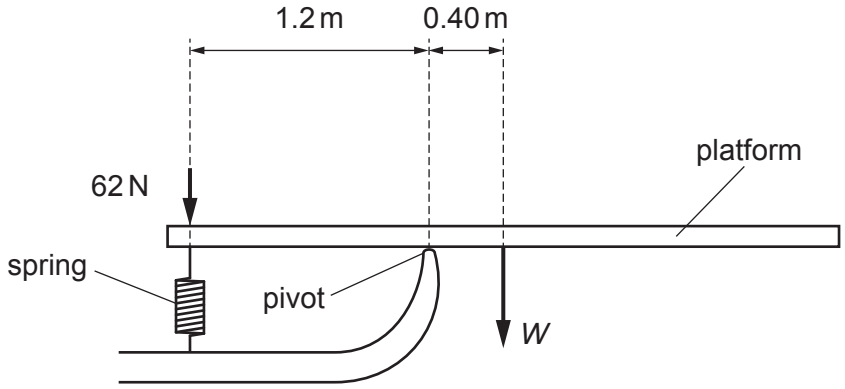

Fig. 3.2 (not to scale)

The moment of the weight *W* of the platform is balanced by the moment of the spring. The spring exerts a downward force of 62 N.

Using the information in Fig. 3.2, calculate the weight *W* of the platform.

W = ... N [3]

(ii) The graph of load against extension for a spring is shown in Fig. 3.3.

View solution

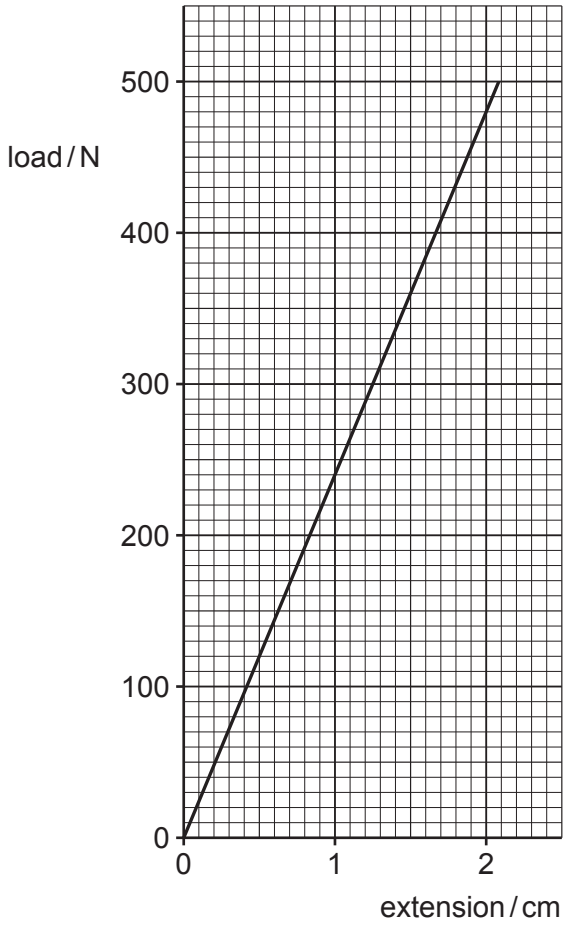

Fig. 3.3

The unstretched length of the spring is 16 cm.

Determine the length of the spring when the load on the spring is 240 N.

length of spring = ... cm [2]

[Total: 8]

4 A student holds a pile of books. The mass of the books is 3.2 kg.

(a) Calculate the weight of the books.

View solution

weight = ... N [2]

(b) The student carries the books from the bottom to the top of the stairs shown in Fig. 4.1.

View solution

The vertical height of the stairs is 4.5 m.

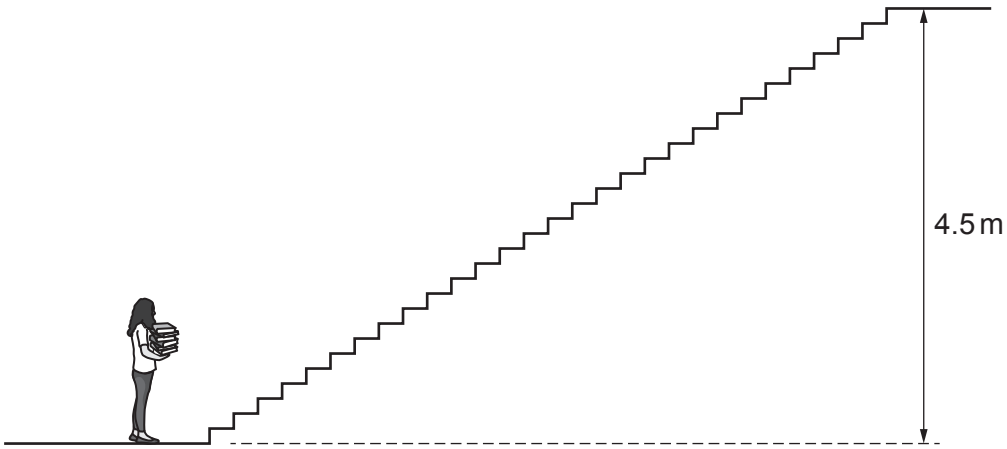

Fig. 4.1

(i) Show that the work done on the books when they are carried to the top of the stairs is approximately 140 J.

[3]

(ii) Determine the gravitational potential energy gained by the books.

Give a reason for your answer.

View solution

gravitational potential energy = ... J

reason .....

[2]

[Total: 7]

5 Fig. 5.1 shows a tidal turbine.

A tidal turbine generates electricity from the energy stored in tides.

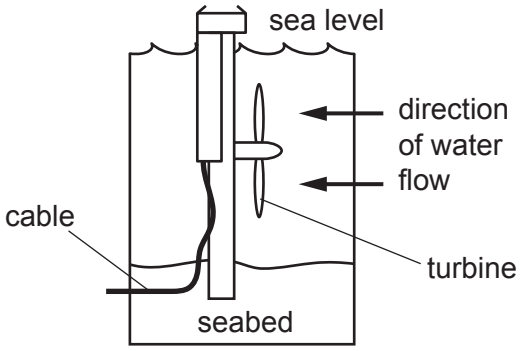

Fig. 5.1

View solution

(a) State **two advantages** of using the energy stored in tides for generating electricity compared with using a coal-fired power station. Ignore building and other costs.

1 .....

2 .....

[2]

(b) State **two disadvantages** of using the energy stored in tides for generating electricity compared with using a coal-fired power station. Ignore building and other costs.

1 .....

2 .....

[2]

[Total: 4]

View solution

6 **(a)** Fig. 6.1 shows a cold drink in a thermal jug. The jug reduces thermal energy transfer from the surroundings to the drink.

View solution

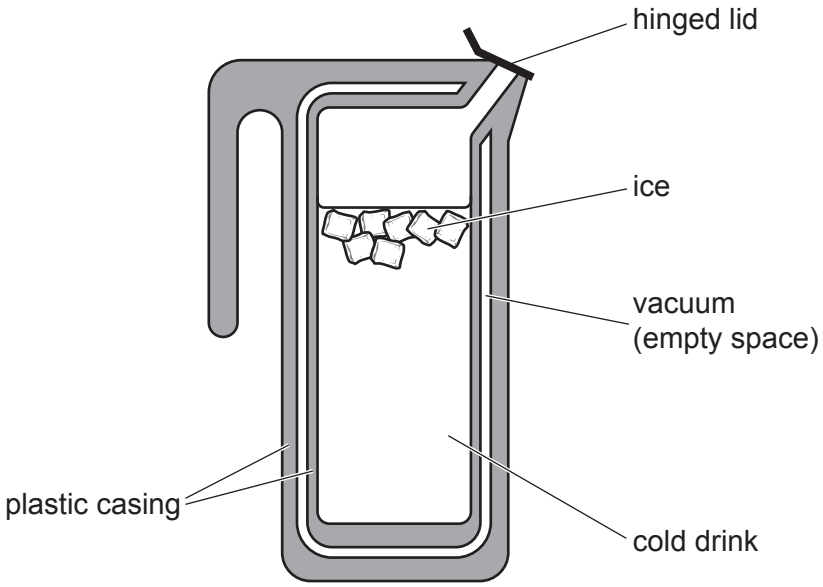

Fig. 6.1

State the names of the **two** processes of thermal energy transfer that are prevented by the vacuum.

Explain how the vacuum prevents these **two** processes of thermal energy transfer.

processes ..... and .....

explanation .....

.....

[2]

(b) Fig. 6.2 represents a demonstration that shows how water moves when heated. The colour from the crystal shows the flow of the water.

View solution

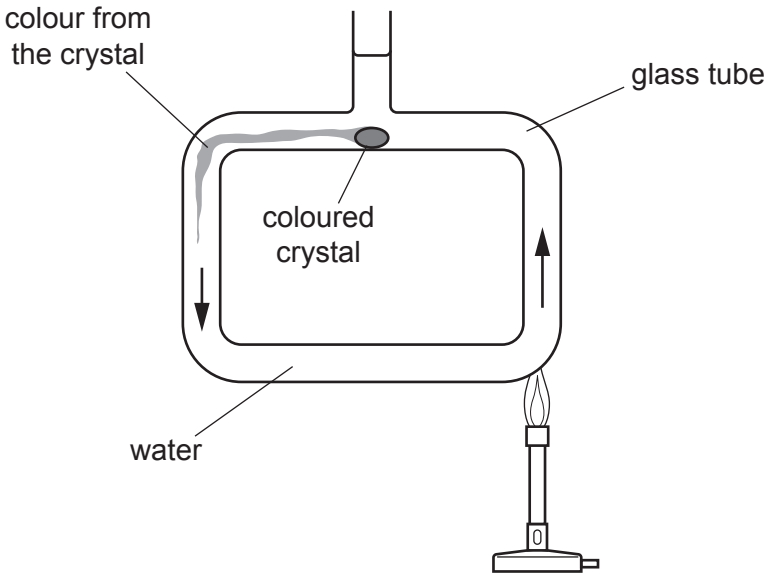

Fig. 6.2

The arrows in Fig. 6.2 show the direction of flow of water in the glass tube when the water is heated.

Explain why the water moves in this way. Use your ideas about density.

.....

.....

.....

..... [4]

[Total: 6]

7 A student can hear trains passing her house.

(a) Describe the motion that a sound wave gives to air particles.

View solution

..... [1]

(b) When the student is at her house, she can hear and see the trains, as shown in Fig. 7.1.

View solution

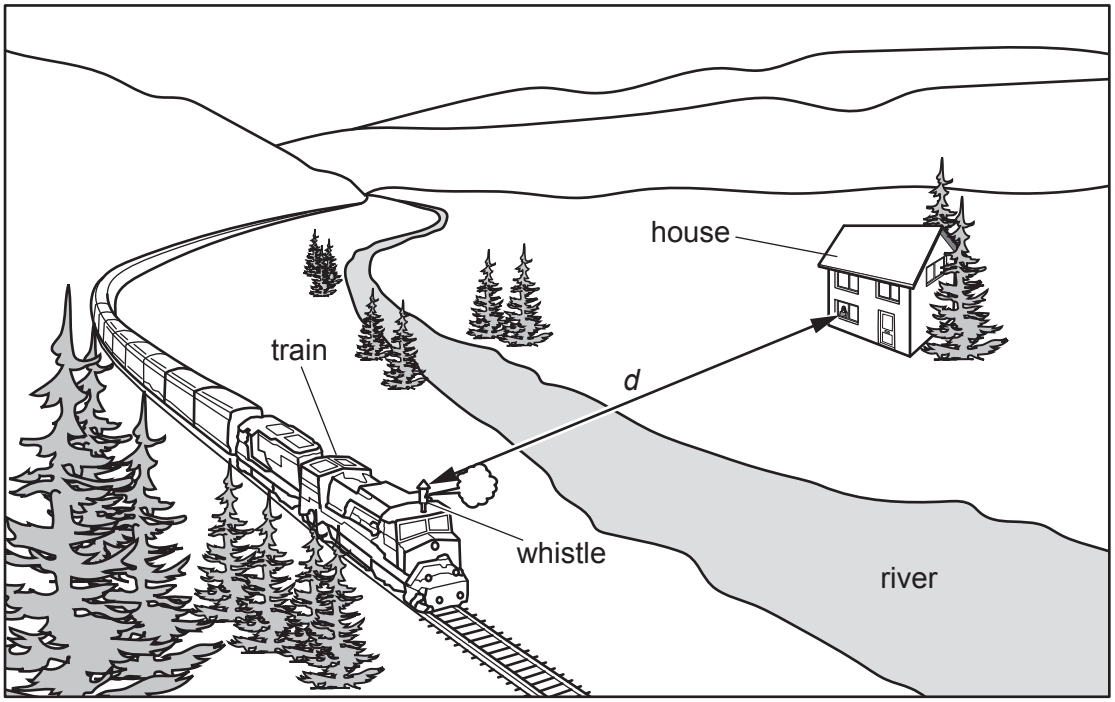

Fig. 7.1 (not to scale)

When a train whistle blows, steam comes out of the whistle.

The student measures the time interval between seeing the steam coming out of the whistle and hearing the whistle.

(i) Suggest a suitable device for measuring this time interval.

..... [1]

(ii) The time interval is 1.6 s between the steam coming out of the whistle and the student hearing the whistle.

View solution

The speed of sound in air is 340 m / s.

Calculate the distance *d* from the whistle to the student.

distance *d* = ... m [3]

(c) State the range of audible frequencies for a healthy human ear. Include the unit.

View solution

..... [2]

[Total: 7]

© UCLES 2023

BLANK PAGE

8 **(a)** In Fig. 8.1, each diagram illustrates a wave property.

View solution

Draw a line from each diagram to the correct wave property.

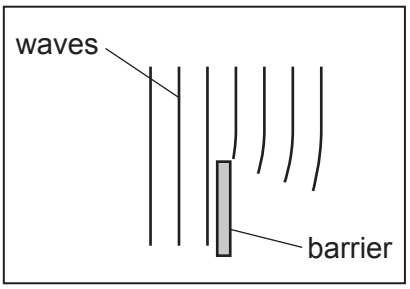

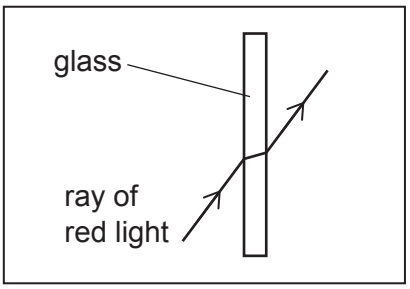

reflection

diffraction

dispersion

refraction

Fig. 8.1

[2]

(b) An object O is placed in front of a converging lens.

Fig. 8.2 shows two rays of light from the object passing through the lens.

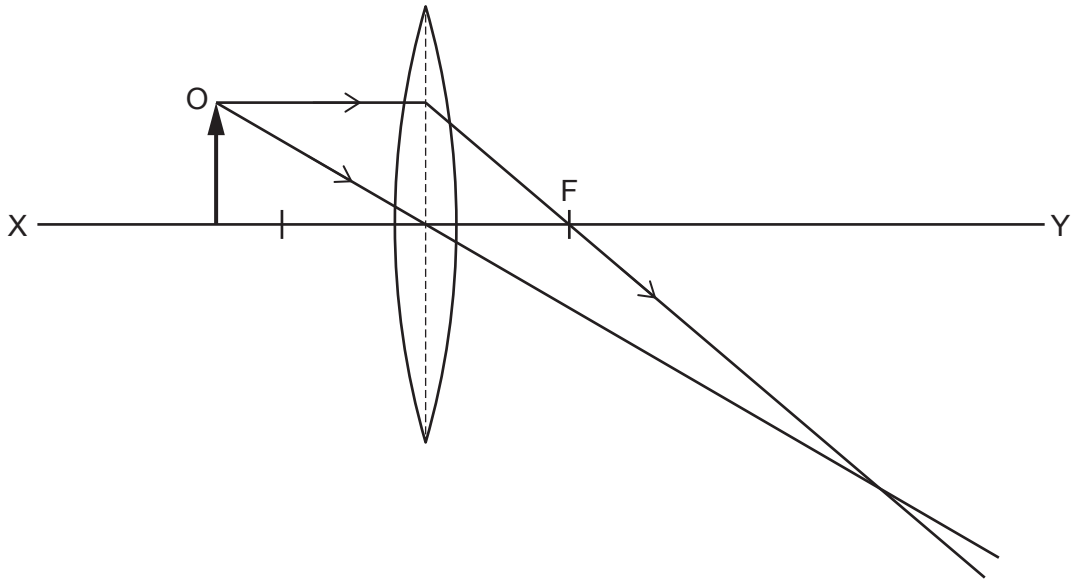

Fig. 8.2

(i) State the name of the line XY in Fig. 8.2.

..... [1]

(ii) State the name of the point labelled F in Fig. 8.2.

..... [1]

(iii) On Fig. 8.2, draw an arrow to represent the image of O. [1]

(iv) Using a ruler, measure the focal length of the converging lens.

focal length = ... cm [1]

(v) Describe characteristics of the image in Fig. 8.2.

View solution

Choose words from the list. Tick (✓) **three** boxes.

enlarged	
diminished	
same size	
inverted	
upright	
virtual	
real	

[3]

[Total: 9]

© UCLES 2023

9 Fig. 9.1 shows an electric water heater. The heater is connected to the mains electrical supply.

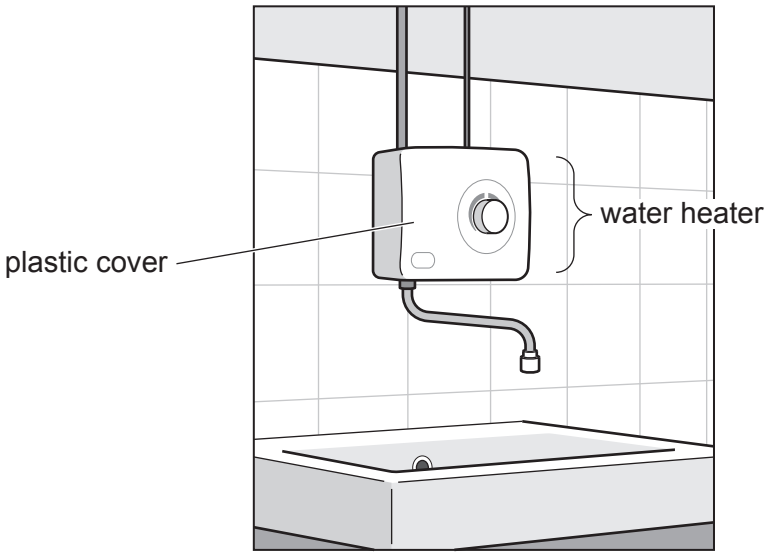

Fig. 9.1

Fig. 9.2 shows the electrical safety label for the heater.

Water Heater Model xxxxxx1
230 V (volts)
720 W (watts)
Disconnect from the mains supply before removing the plastic cover.

Fig. 9.2

View solution

(a) (i) Explain why the safety label states, 'Disconnect from the mains supply before removing the plastic cover.'

.....

..... [1]

(ii) The heater is switched on.

View solution

Calculate the current in the heater. Use the information in Fig. 9.2.

current = ... A [3]

(b) Table 9.1 shows some electrical meter readings for the water heater.

View solution

Table 9.1

date	meter reading / kW h
1st October	3771
31st October	3797

Electrical energy costs 18 cents per kW h.

Calculate the cost of using the heater from 1st October until 31st October.

cost = ... cents [3]

[Total: 7]

10 (a) Different materials have differing magnetic properties.

View solution

(i) State the name of a material that is suitable for a **temporary** magnet.

..... [1]

(ii) State the name of a material that is suitable for a **permanent** magnet. View solution

..... [1]

(iii) State how a magnet can show that a material is non-magnetic. View solution

..... [1]

(b) A teacher uses the arrangement in Fig. 10.1 to demonstrate an electric bell. When the switch is closed, the hammer repeatedly hits the metal gong.

View solution

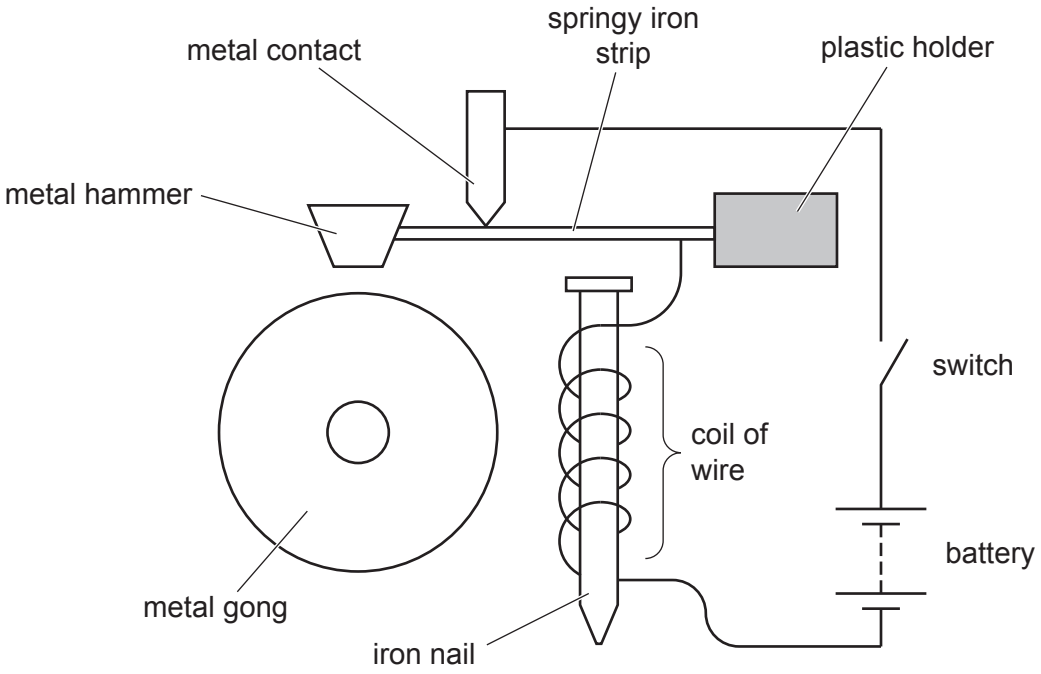

Fig. 10.1

Using the information in Fig. 10.1, explain why the hammer repeatedly hits the metal gong when the switch is closed.

.....

.....

.....

.....

..... [4]

[Total: 7]

11 Fig. 11.1 represents all the particles in a beryllium atom.

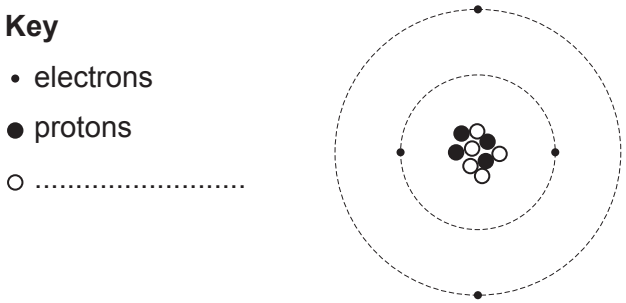

Fig. 11.1 (not to scale)

(a) **(i)** The symbol for the element beryllium is Be. Give the nuclide notation for the isotope shown in Fig. 11.1.

View solution

.....
Be
.....

[1]

(ii) The key for Fig. 11.1 gives the names of two types of particle. One label is missing.

Complete the key by adding the name of the third type of particle shown in Fig. 11.1. [1]

(b) Fig. 11.2 shows four different particle diagrams, A, B, C and D.

View solution

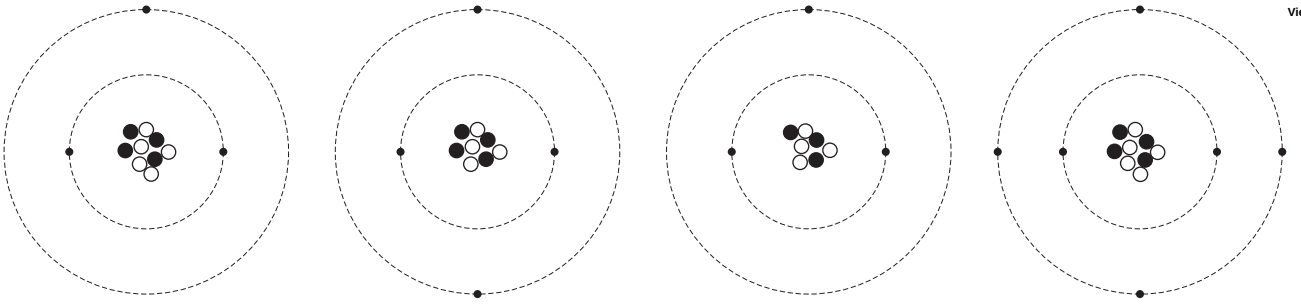

Fig. 11.2

(i) State which diagrams show an isotope of beryllium.

..... [1]

(ii) State which diagram shows a positive ion.

..... [1]

View solution

(c) A scientist uses a detector and counter to measure the count rate due to radiation emitted from a radioactive source.

View solution

The first measurement is 400 counts / min.

The scientist takes another measurement 6 hours later. This measurement is 50 counts / min.

Calculate the half-life of the radioactive source.

half-life = ... h [2]

[Total: 6]

12 There are eight planets in our Solar System.

Table 12.1 shows the names of some of the planets in order of distance from the Sun.

View solution

Table 12.1

Mercury				Jupiter			Neptune
increasing distance from the Sun →							

(a) Complete Table 12.1 by writing the names of the other planets in order of increasing distance from the Sun. [2]

(b) The planets in Table 12.1 orbit the Sun.

View solution

State the names of **two** other types of natural object that orbit the Sun.

1 .....

2 .....

[2]

(c) Complete the sentences to describe Mercury and Jupiter. Use words from the list.

View solution

large **rocky** **gaseous** **small** **liquid**

Mercury is ..... and .....

Jupiter is ..... and .....

[2]

[Total: 6]

© UCLES 2023

BLANK PAGE

Permission to reproduce items where third-party owned material protected by copyright is included has been sought and cleared where possible. Every reasonable effort has been made by the publisher (UCLES) to trace copyright holders, but if any items requiring clearance have unwittingly been included, the publisher will be pleased to make amends at the earliest possible opportunity.

To avoid the issue of disclosure of answer-related information to candidates, all copyright acknowledgements are reproduced online in the Cambridge Assessment International Education Copyright Acknowledgements Booklet. This is produced for each series of examinations and is freely available to download at www.cambridgeinternational.org after the live examination series.

Cambridge Assessment International Education is part of Cambridge Assessment. Cambridge Assessment is the brand name of the University of Cambridge Local Examinations Syndicate (UCLES), which is a department of the University of Cambridge.

© UCLES 2023