Cambridge Assessment International Education

Cambridge IGCSE™

CANDIDATE NAME									
CENTRE NUMBER						CANDIDATE NUMBER				

PHYSICS **0625/42**

Paper 4 Theory (Extended) **October/November 2023**

1 hour 15 minutes

You must answer on the question paper.

No additional materials are needed.

INSTRUCTIONS

- Answer **all** questions.
- Use a black or dark blue pen. You may use an HB pencil for any diagrams or graphs.
- Write your name, centre number and candidate number in the boxes at the top of the page.
- Write your answer to each question in the space provided.
- Do **not** use an erasable pen or correction fluid.
- Do **not** write on any bar codes.
- You may use a calculator.
- You should show all your working and use appropriate units.
- Take the weight of 1.0 kg to be 9.8 N (acceleration of free fall = 9.8 m / s^2).

INFORMATION

- The total mark for this paper is 80.
- The number of marks for each question or part question is shown in brackets [ ].

This document has **16** pages.

© UCLES 2023

1 A car accelerates uniformly in a straight line from rest at time $t = 0$. At $t = 3.2\,s$, the speed of the car is $13.0\,m/s$.

(a) (i) Calculate the acceleration of the car.

View solution

acceleration = ... [2]

(ii) Explain in words what is meant by the term acceleration.

View solution

.....

..... [1]

(b) The car travels at $13.0\,m/s$ from $t = 3.2\,s$ to $t = 12.0\,s$.

View solution

(i) Plot the speed–time graph for the car from $t = 0$ to $t = 12.0\,s$.

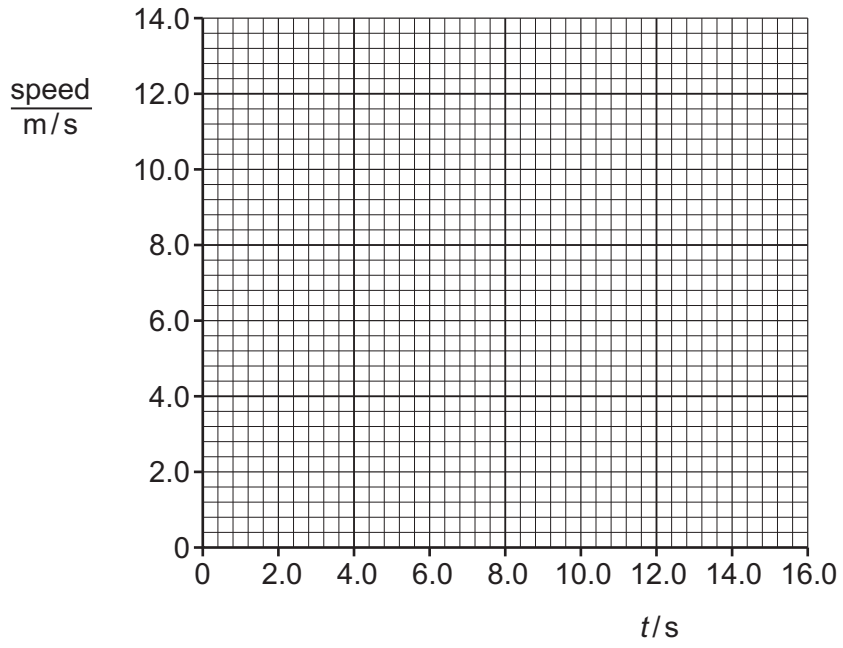

[2]

(ii) Determine the distance travelled by the car between $t = 0$ and $t = 3.2\,s$.

View solution

distance = ... [2]

© UCLES 2023

(c) The car decelerates from 13.0 m / s to 0 m / s at a constant deceleration. The mass of the car is 1350 kg. The car travels 13 m in 2.0 s as it decelerates.

View solution

Show that the work done by the car as it decelerates is approximately 1.1×10^5 J.

[4]

(d) On another day, the car in **(c)** travels a longer distance while it decelerates from 13.0 m / s to 0 m / s. The deceleration is constant.

View solution

Suggest and explain what causes the stopping distance to increase.

suggestion .....

.....

explanation .....

.....

[2]

[Total: 13]

2 Fig. 2.1 shows an electric tumble dryer used to dry wet clothes.

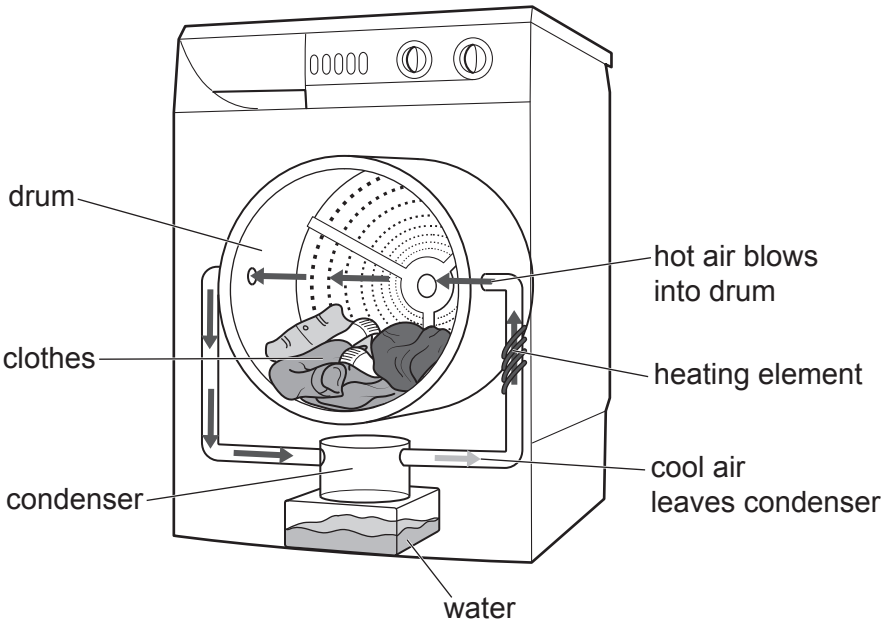

Fig. 2.1

(a) Hot air blows into the drum. The air gains water vapour from the clothes and then leaves the drum. The moist air enters the condenser. Cool air leaves the condenser, passes through the heating element and enters the drum again.

(i) State the process by which the hot air removes water from the wet clothes.

View solution

..... [1]

(ii) The air is cooled as it passes through the condenser.

View solution

Describe and explain **one** other way in which the air leaving the condenser is different from the air entering the condenser.

description .....

explanation .....

.....

[2]

(b) The drum of the tumble dryer rotates, lifting up the wet clothes which then fall down through the hot air.

(i) Name the force that causes the clothes to fall down.

View solution

..... [1]

(ii) When the drum rotates too fast the clothes remain in contact with the wall of the drum.

State the direction of the resultant force on the clothes during the circular motion.

..... [1]

© UCLES 2023

(c) Suggest why using a clothesline to dry clothes in the open air is better for the environment than using an electric tumble dryer.

.....

..... [1]

[Total: 6]

View solution

3 **(a)** A balloon of mass 15 g is glued to a straw. The straw is threaded onto a horizontal string, as shown in Fig. 3.1.
The balloon is filled with air and then the air is released.

View solution

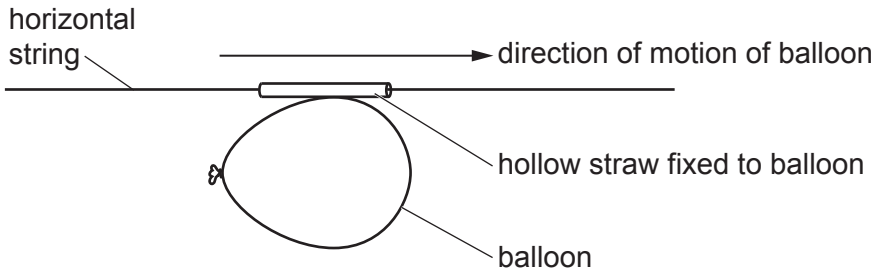

Fig. 3.1

As the air leaves the balloon, the balloon experiences a force.
The balloon accelerates from rest until it reaches a constant speed. It then travels 0.67 m in 0.18 s at this constant speed.

(i) Explain in words what is meant by the term impulse.

.....

..... [1]

(ii) Calculate the resultant impulse on the balloon while it is accelerating.

View solution

impulse = ... [3]

(iii) Explain how momentum is conserved as the balloon accelerates.

View solution

.....

.....

..... [2]

© UCLES 2023

(b) Fig. 3.2 shows the directions of two forces acting on a different balloon as it moves.

View solution

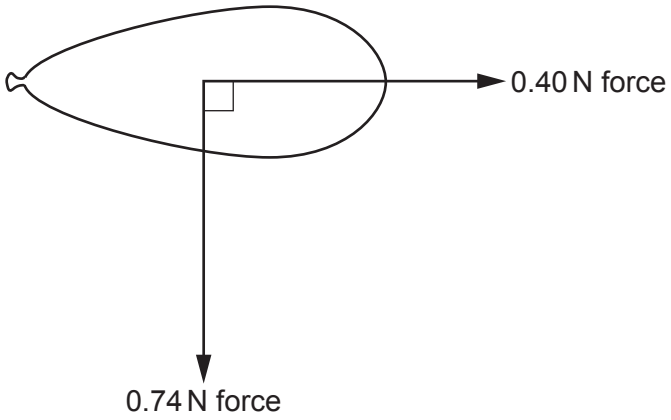

Fig. 3.2 (not to scale)

Determine the magnitude and direction of the resultant force on the balloon.

magnitude .....

direction relative to horizontal force .....
[4]

[Total: 10]

© UCLES 2023

4 Fig. 4.1 shows a bottle part-filled with water. The air inside the bottle is at the same pressure as the air outside the bottle. The bottle and its contents are at room temperature.

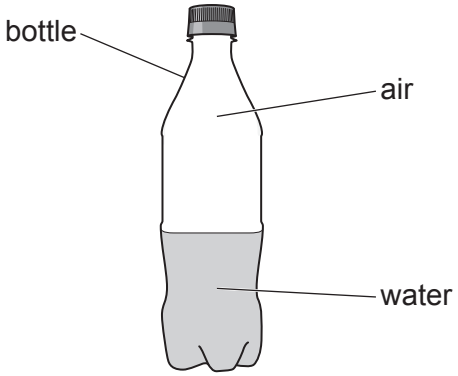

Fig. 4.1

View solution

(a) The temperature of the bottle and its contents are increased.

(i) Explain, in terms of particles, how the air pressure inside the bottle changes as the temperature increases.

.....

.....

.....

..... [3]

View solution

(ii) The lid is removed from the bottle.

State and explain how the air pressure inside the bottle changes.

statement .....

explanation .....

.....

[2]

(b) The mass of water in the bottle is 0.18 kg. The specific heat capacity of water is 4200 J / (kg °C).

Calculate the thermal energy needed to increase the temperature of the water by 20 °C.

View solution

thermal energy = ... [2]

(c) Another plastic bottle is filled to the top with water. The height of the bottle is 40.0 cm. The density of water is 1.0×10^3 kg / m^3.

Calculate the pressure difference between the top and bottom of the water.

View solution

pressure difference = ... [2]

[Total: 9]

5 Fig. 5.1 shows a road junction, a moving car and a stationary truck. The road has high walls on each side.

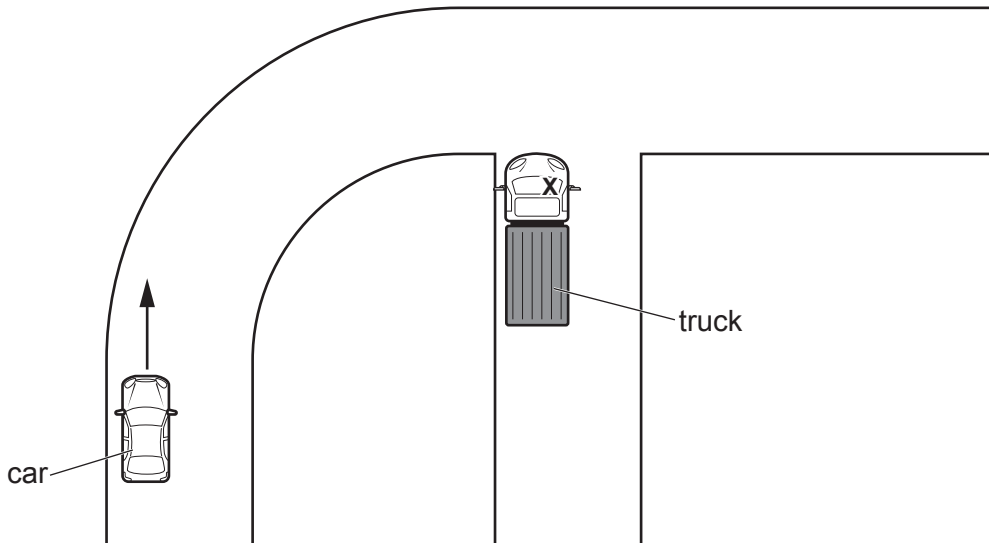

Fig. 5.1

View solution

(a) The driver of the truck is at position **X**. The car moves around the corner.

On Fig. 5.1, label a point Y on the road where the truck driver first sees the car. [1]

View solution

(b) A plane mirror is placed at the road junction as shown in Fig. 5.2.

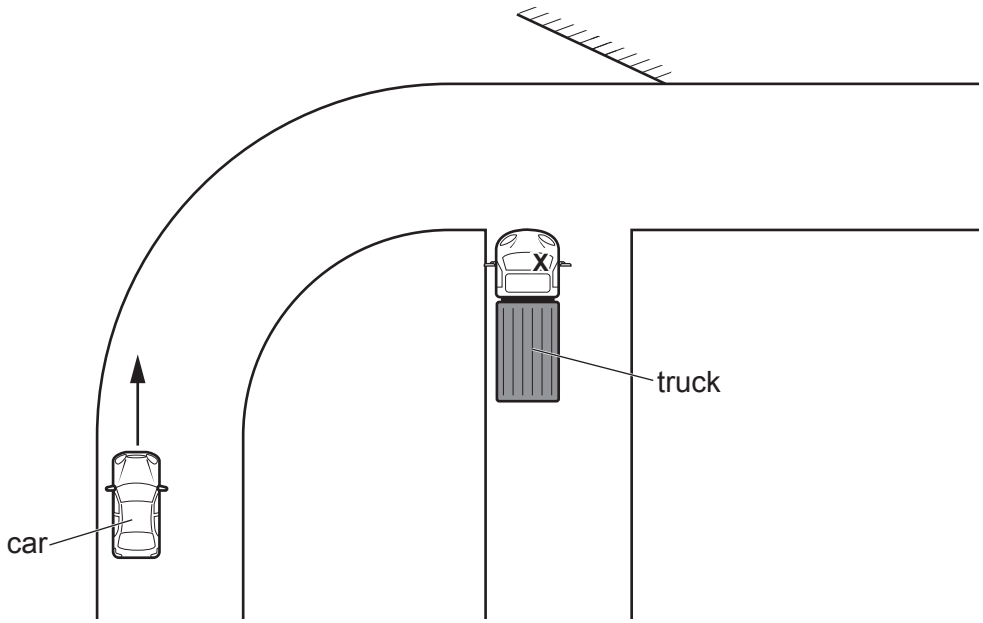

Fig. 5.2

Show how this mirror allows the driver of the truck to see the car when it is at the position shown in Fig. 5.2. [2]

(c) The truck driver wears spectacles to correct long-sightedness. Fig. 5.3 shows how a blurred image of an object O forms on the retina. Any effect of the cornea on the rays of light can be ignored.

View solution

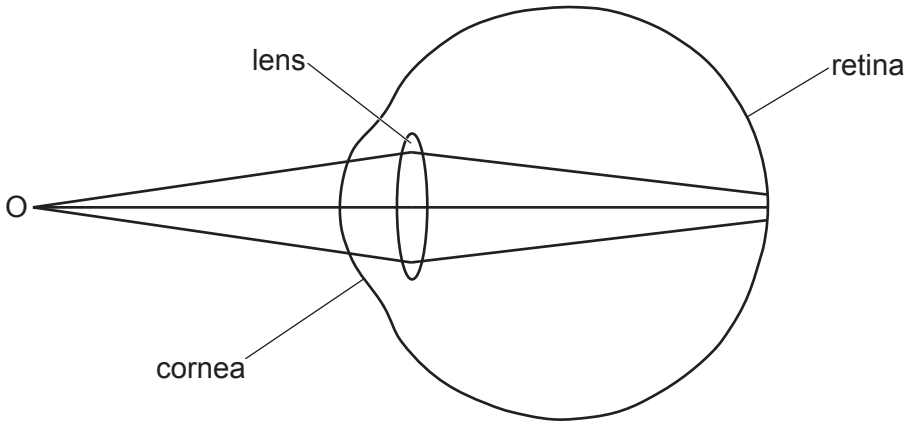

Fig. 5.3

On Fig. 5.4, show how long-sightedness is corrected by:

- adding a suitable lens in front of the eye
- continuing the path of the **three** rays of light until they meet to form an image.

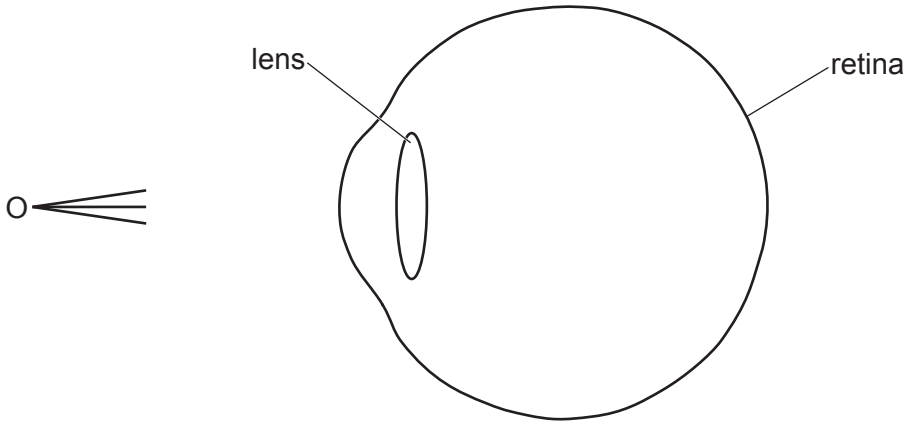

Fig. 5.4

[4]

[Total: 7]

6 Fig. 6.1 shows the circuit diagram for a flashlight (torch).

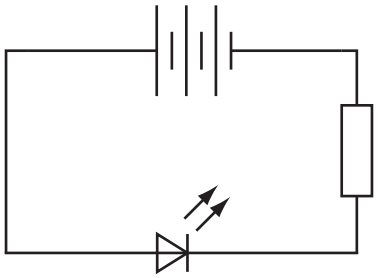

Fig. 6.1

The electromotive force (e.m.f.) of the battery is 4.5 V. The circuit contains a 60 Ω fixed resistor. The current in the light-emitting diode (LED) is 0.020 A.

(a) Calculate the potential difference (p.d.) across the LED.

View solution

p.d. = ... [2]

(b) Explain why the LED does **not** light up if the battery is reversed.

View solution

.....

..... [1]

(c) The chemical energy stored in the battery is 1050 J.

View solution

Show that the flashlight operates for approximately 3 h.

[2]

(d) Calculate the total charge that flows through the LED in 3600 s.

View solution

charge = ... [2]

[Total: 7]

© UCLES 2023

7 Fig. 7.1 shows some uses of electromagnetic radiation and different regions of the electromagnetic spectrum.

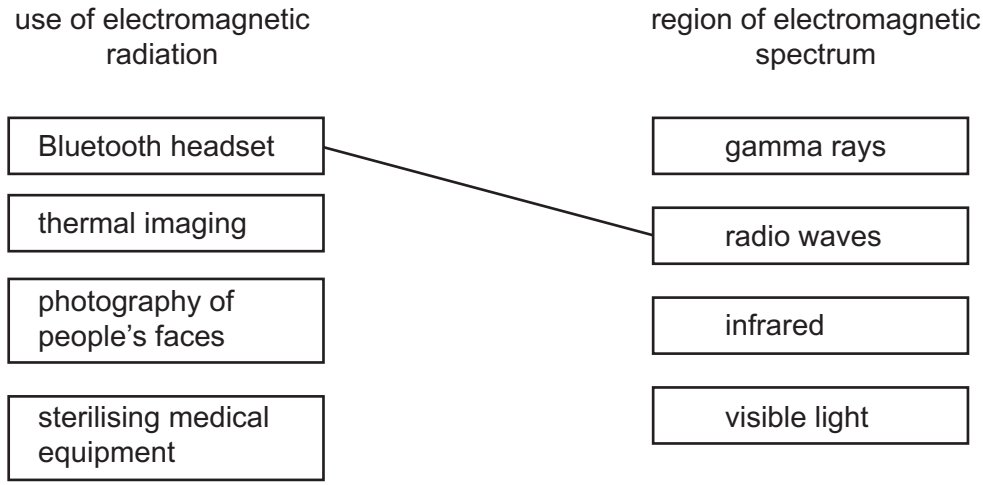

Fig. 7.1

View solution

(a) Draw a line from each use to the correct region of the spectrum. Each region of the spectrum is used once. One line has been completed for you. [2]

(b) State the speed of electromagnetic waves in a vacuum.

View solution

speed = ... [1]

(c) A Bluetooth headset can be used to listen to music on a mobile (cell) phone without the need for wires to connect the headset to the phone.

View solution

(i) The headset uses frequencies in the range 2.40–2.48 GHz.

Calculate the wavelength of the radio waves when the frequency is in the middle of the frequency range.

wavelength = ... [3]

(ii) Suggest why a Bluetooth headset only works well over short distances.

View solution

.....

..... [1]

[Total: 7]

© UCLES 2023

8 The isotope uranium-235 is represented by

$$^{235}_{92}U.$$

(a) State what the numbers 92 and 235 represent in this symbol.

View solution

92 is .....

235 is .....

[2]

(b) Uranium-235 is a fuel used in nuclear reactors.

View solution

(i) State the process by which energy is released from uranium-235 in a nuclear reactor.

..... [1]

(ii) A nuclide equation for this process is

View solution

$$^{235}_{92}U + {}^{1}_{0}n \longrightarrow {}^{140}_{54}Xe + {}^{94}_{38}Sr + 2\ {}^{1}_{0}n.$$

Describe the mass and energy changes that take place during this process in a nuclear reactor.

.....

.....

..... [2]

(c) **(i)** Describe how thermal energy from nuclear reactions is used to generate electricity in a power station.

.....

.....

.....

..... [3]

(ii) State **one** advantage and **one** disadvantage of using nuclear fuels in a power station instead of using fossil fuels.

advantage .....

.....

disadvantage .....

.....

[2]

View solution

[Total: 10]

© UCLES 2023

9 Table 9.1 gives information about three planets in the Solar System.

Table 9.1

planet	mass / 10^{24} kg	average distance from Sun / 10^{6} km	orbital period / days	gravitational field strength at surface / N / kg
Earth	5.97	149.6	365.2	9.8
Jupiter	1898	778.6	4331	23.1
X	4.87	108.2	224.7	8.9

(a) State the name of planet X.

View solution

..... [1]

(b) Describe the relationship shown in Table 9.1 between the mass of a planet and the gravitational field strength at its surface.

.....

..... [1]

(c) Explain why 'distance from Sun' in Table 9.1 is an average value.

View solution

.....

..... [1]

(d) Show that the average orbital speed of the Earth is approximately 30 km / s.

View solution

[3]

[Total: 6]

© UCLES 2023

10 Complete the sentences about the life cycle of stars.

(a) Protostars are formed from .....

..... [1]

(b) A protostar becomes a stable star when .....

.....

is balanced by .....

.....

[2]

(c) The initial fuel used to power nuclear reactions in stars is ..... [1]

(d) Stars that are approximately the same size as the Sun become red giant stars which then form a .....

with a white dwarf star at its centre. [1]

[Total: 5]

View solution

Permission to reproduce items where third-party owned material protected by copyright is included has been sought and cleared where possible. Every reasonable effort has been made by the publisher (UCLES) to trace copyright holders, but if any items requiring clearance have unwittingly been included, the publisher will be pleased to make amends at the earliest possible opportunity.

To avoid the issue of disclosure of answer-related information to candidates, all copyright acknowledgements are reproduced online in the Cambridge Assessment International Education Copyright Acknowledgements Booklet. This is produced for each series of examinations and is freely available to download at www.cambridgeinternational.org after the live examination series.

Cambridge Assessment International Education is part of Cambridge Assessment. Cambridge Assessment is the brand name of the University of Cambridge Local Examinations Syndicate (UCLES), which is a department of the University of Cambridge.