Cambridge Assessment International Education

Cambridge IGCSE™

CANDIDATE NAME									
CENTRE NUMBER						CANDIDATE NUMBER				

PHYSICS **0625/62**

Paper 6 Alternative to Practical **October/November 2023**

1 hour

You must answer on the question paper.

No additional materials are needed.

INSTRUCTIONS

- Answer **all** questions.
- Use a black or dark blue pen. You may use an HB pencil for any diagrams or graphs.
- Write your name, centre number and candidate number in the boxes at the top of the page.
- Write your answer to each question in the space provided.
- Do **not** use an erasable pen or correction fluid.
- Do **not** write on any bar codes.
- You may use a calculator.
- You should show all your working and use appropriate units.

INFORMATION

- The total mark for this paper is 40.
- The number of marks for each question or part question is shown in brackets [ ].

This document has **12** pages. Any blank pages are indicated.

© UCLES 2023

1 A student investigates the period of a pendulum.

Fig. 1.1 shows the set-up.

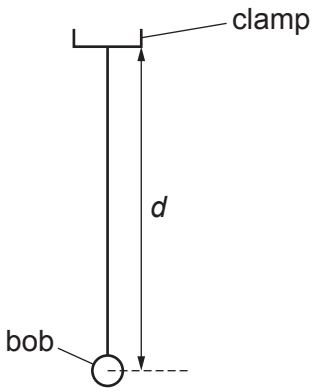

Fig. 1.1

View solution

(a) The distance *d* is measured from the bottom of the clamp to the centre of the bob.

The student adjusts the length of the pendulum until *d* = 50.0 cm.

He displaces the bob slightly and releases it so that it swings.

He uses a stop-watch to measure the time *t* for 10 complete oscillations.



Fig. 1.2

(i) Fig. 1.2 shows the reading on the stop-watch.

Record, in Table 1.1, the time *t* for 10 complete oscillations. [1]

(ii) Calculate and record in Table 1.1, the period *T* of the pendulum. The period is the time for one complete oscillation. [1]

(iii) Calculate T^2 and record your value in Table 1.1. [1]

(iv) Write the units in the column headings. [2]

© UCLES 2023

Table 1.1

d/	t/	T/	T^2/
50.0			
100.0	20.20	2.02	4.08

(b) The student repeats the procedure in **(a)** using d = 100.0 cm. The readings and results are shown in Table 1.1.

View solution

Another student suggests that T^2 is directly proportional to d.

Explain briefly how to test the suggestion using the results in Table 1.1.

.....

.....

.....

..... [2]

(c) The procedure can be repeated to plot a graph.

View solution

Suggest additional values of d that are suitable for the experiment.

.....

..... [1]

(d) Explain how you would measure the distance d as accurately as possible. Draw a diagram to help your explanation.

View solution

.....

..... [2]

(e) Explain why timing 10 oscillations gives a more accurate result for the period T than timing one oscillation.

.....

..... [1]

[Total: 11]

© UCLES 2023

2 A student investigates the resistance of a wire.

Fig. 2.1 shows the circuit used.

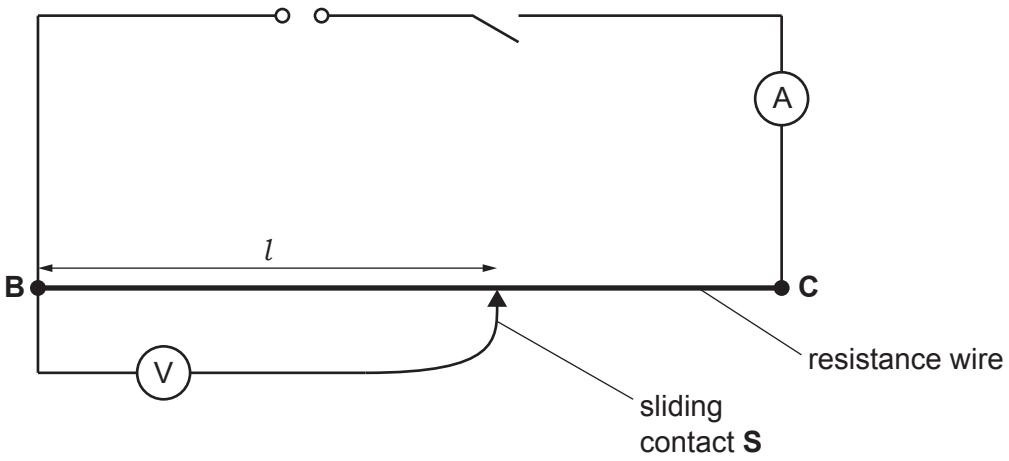

Fig. 2.1

(a) The student places a sliding contact **S** at a distance l = 40.0 cm from **B**.

She measures the potential difference (p.d.) V across the length l of the resistance wire.

She measures the current I in the circuit.

The meters are shown in Fig. 2.2 and Fig. 2.3.

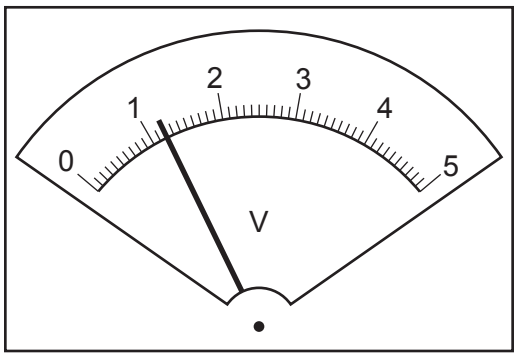

Fig. 2.2

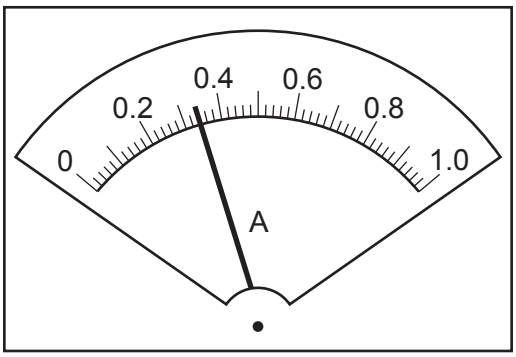

Fig. 2.3

(i) Write down the current I.

I = ... [1]

(ii) Record the potential difference V reading in the first row of Table 2.1. [1]

(b) The student repeats the procedure in **(a)** using l = 50.0 cm, 60.0 cm, 70.0 cm and 80.0 cm.

The readings are shown in Table 2.1.

(i) Calculate, and record in Table 2.1, the values of resistance R using the equation

$$R = \frac{V}{I}.$$

[2]

(ii) Complete the column headings in Table 2.1. [1]

View solution

Table 2.1

l/	*V*/	*R*/
40.0		
50.0	1.5	
60.0	1.8	
70.0	2.1	
80.0	2.4	

View solution

(c) Plot a graph of *R* (*y*-axis) against *V* (*x*-axis). Start both axes at the origin (0,0).

Draw the best-fit line.

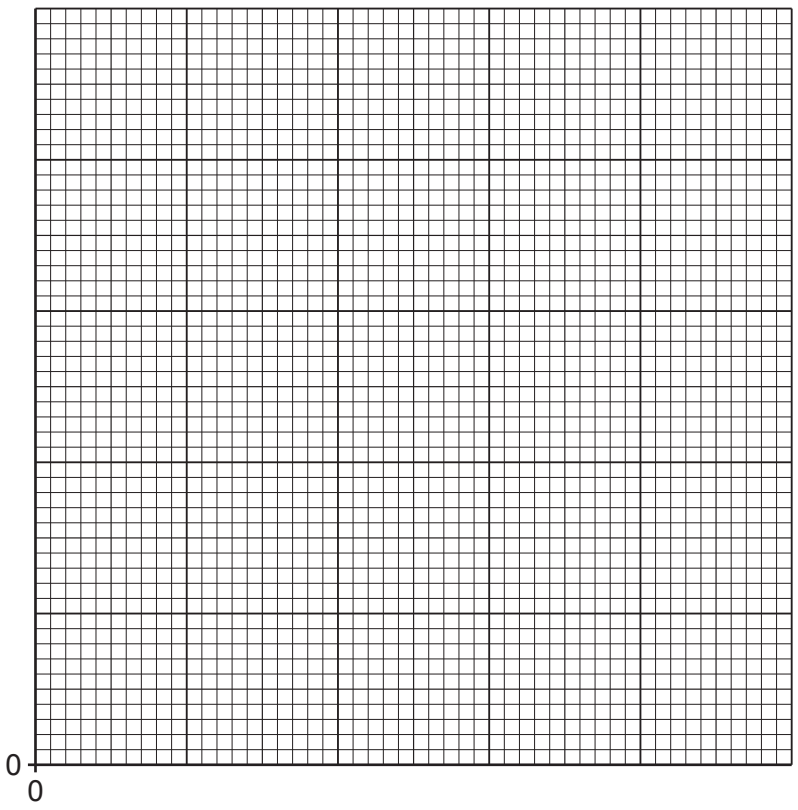

[4]

(d) Determine the gradient *G* of the graph. Show clearly on the graph how you obtained the necessary information.

G = ... [2]

[Total: 11]

View solution

3 A student investigates the cooling of water under different conditions.

Fig. 3.1 shows the set-up.

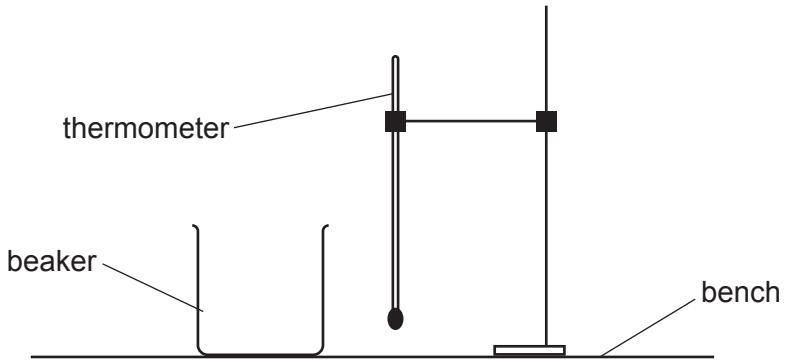

Fig. 3.1

(a) The thermometer in Fig. 3.2 shows the room temperature θ_R at the beginning of the experiment. Record θ_R.

View solution

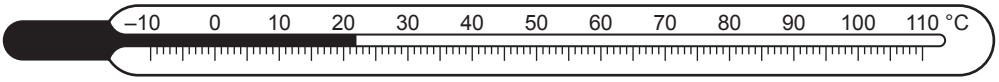

Fig. 3.2

θ_R = ... [1]

(b) The student pours 200 cm^3 of hot water into the beaker. He places the thermometer in the water.

He records the temperature θ of the hot water at time $t = 0$. He immediately starts a stop-watch.

He records the temperature at 30 s intervals. The temperature readings are shown in Table 3.1.

(i) Write the times in the first column of Table 3.1. [1]

(ii) Complete the column headings in Table 3.1.

View solution

Table 3.1

t/	θ/
	95
	86
	78
	72
	68
	66
	65

[1]

(c) **(i)** Calculate the decrease in temperature $\Delta\theta_1$ between time t = 0 and time t = 90 s.

$\Delta\theta_1$ = ... [1]

(ii) Calculate the difference in temperature $\Delta\theta_S$ between the temperature at time t = 0 and room temperature θ_R.

$\Delta\theta_S$ = ... [1]

(iii) Calculate the decrease in temperature $\Delta\theta_2$ between time t = 90 s and time t = 180 s.

View solution

$\Delta\theta_2$ = ...

Calculate the difference in temperature $\Delta\theta_T$ between the temperature at time t = 90 s and room temperature θ_R.

$\Delta\theta_T$ = ...
[1]

(d) A student suggests that the decrease in temperature of the water in 90 s should be greater when the starting temperature is greater.

(i) State whether the results agree with this suggestion. Justify your statement by reference to the results.

statement .....

justification .....

.....

.....
[2]

(ii) Suggest how you would continue the experiment, using the same apparatus and method, to investigate the suggestion.

.....

.....

.....

..... [2]

(e) Refer to Table 3.1. Estimate the temperature of the water in the beaker after cooling for a further 90 s.

..... [1]

View solution [Total: 11]

4 A student investigates the effect of changing the colour of light on the focal length of a lens.

View solution

The focal length f of a lens is given by the equation $f = \frac{uv}{(u + v)}$.

The distance u is the distance between an object and the lens. The distance v is the distance between the lens and the image that is formed on a screen.

Plan an experiment to investigate the effect of changing the colour of light on the focal length of a lens.

The following apparatus is available to the student:

- illuminated object
- a selection of coloured filters to change the colour of the light
- converging lens
- screen
- metre ruler.

Other apparatus normally available in a school laboratory can also be used.

In your plan, you should:

- draw a labelled diagram to show the arrangement of the apparatus
- explain briefly how you would do the investigation, including the measurements you would take
- draw a suitable table, with column headings, to show how you would display your readings (you are **not** required to enter any readings in the table)
- state how you would use your results to reach a conclusion.

© UCLES 2023

.....

.....

.....

.....

.....

.....

.....

.....

.....

.....

.....

.....

.....

.....

.....

.....

.....

..... [7]

BLANK PAGE

BLANK PAGE

BLANK PAGE

Permission to reproduce items where third-party owned material protected by copyright is included has been sought and cleared where possible. Every reasonable effort has been made by the publisher (UCLES) to trace copyright holders, but if any items requiring clearance have unwittingly been included, the publisher will be pleased to make amends at the earliest possible opportunity.

To avoid the issue of disclosure of answer-related information to candidates, all copyright acknowledgements are reproduced online in the Cambridge Assessment International Education Copyright Acknowledgements Booklet. This is produced for each series of examinations and is freely available to download at www.cambridgeinternational.org after the live examination series.

Cambridge Assessment International Education is part of Cambridge Assessment. Cambridge Assessment is the brand name of the University of Cambridge Local Examinations Syndicate (UCLES), which is a department of the University of Cambridge.

© UCLES 2023