Cambridge Assessment International Education

Cambridge IGCSE™

PHYSICS **0625/12**

Paper 1 Multiple Choice (Core) **October/November 2024**

45 minutes

You must answer on the multiple choice answer sheet.

You will need: Multiple choice answer sheet
Soft clean eraser
Soft pencil (type B or HB is recommended)

INSTRUCTIONS

- There are **forty** questions on this paper. Answer **all** questions.
- For each question there are four possible answers **A**, **B**, **C** and **D**. Choose the **one** you consider correct and record your choice in soft pencil on the multiple choice answer sheet.
- Follow the instructions on the multiple choice answer sheet.
- Write in soft pencil.
- Write your name, centre number and candidate number on the multiple choice answer sheet in the spaces provided unless this has been done for you.
- Do **not** use correction fluid.
- Do **not** write on any bar codes.
- You may use a calculator.
- Take the weight of 1.0 kg to be 9.8 N (acceleration of free fall = 9.8 m / s^2).

INFORMATION

- The total mark for this paper is 40.
- Each correct answer will score one mark.
- Any rough working should be done on this question paper.

This document has **16** pages.

© UCLES 2024

1 A student measures the volumes of three liquids using three different measuring cylinders.

View solution

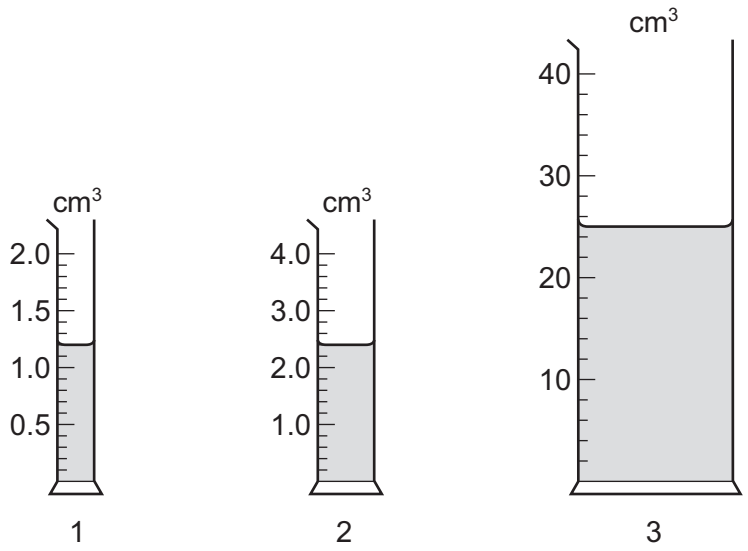

The table shows the volumes recorded by the student.

measuring cylinder	volume / cm^3
1	1.2
2	2.2
3	25

Which readings are correctly recorded?

A 1, 2 and 3 **B** 1 and 2 only **C** 1 and 3 only **D** 1 only

© UCLES 2024

2 The diagram shows how the speed of a falling object changes with time.

View solution

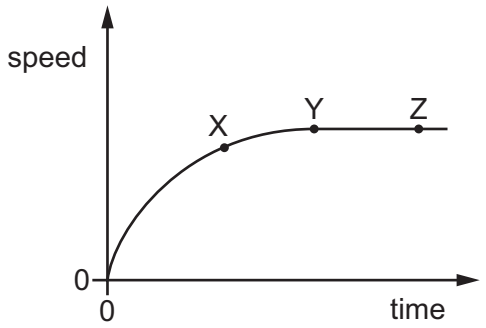

Which row describes the motion of the object between X and Y, and between Y and Z?

	between X and Y	between Y and Z
A	accelerating	at rest
B	accelerating	constant speed
C	decelerating	at rest
D	decelerating	constant speed

3 The speed–time graph represents a journey.

View solution

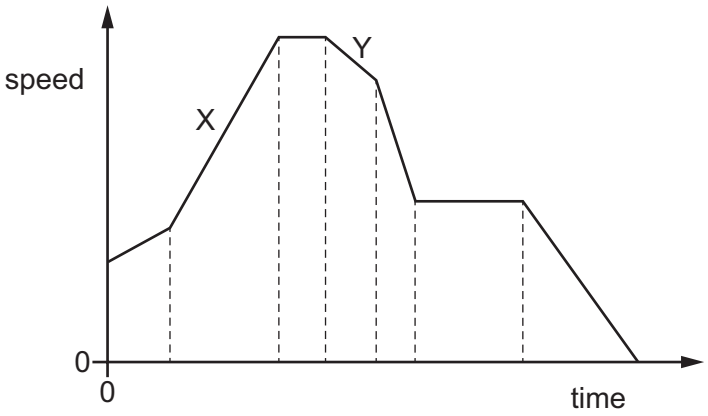

How does the graph show that the distance travelled in section X of the journey is greater than the distance travelled in section Y?

A The area under section X of the graph is greater than the area under section Y.

B The gradient of section X of the graph is greater than the gradient of section Y.

C The speed at the end of section X of the journey is greater than the speed at the end of section Y.

D The time for section X of the journey is greater than the time for section Y.

© UCLES 2024

4 Which row contains two correct statements about the mass and the weight of an object?

View solution

	mass of an object	weight of an object
A	is measured using a measuring cylinder	is measured using a balance
B	is the gravitational force exerted on the object	is the quantity of matter in the object
C	is measured in newtons	is measured in kilograms
D	is the same everywhere	can vary from place to place

5 Which equipment is used to find the density of an irregularly shaped stone?

View solution

A force meter and ruler

B measuring cylinder, ruler and water

C measuring cylinder, top pan balance and water

D top pan balance and ruler

6 The diagram shows a force *F* acting at 90° to a bar at a distance *d* from the point P.

View solution

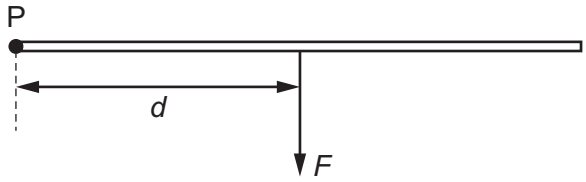

Which pair of changes causes the greatest increase in the moment of the force *F* about the point P?

A halving *F* and halving *d*

B halving *F* and doubling *d*

C doubling *F* and halving *d*

D doubling *F* and doubling *d*

7 A child of weight 420 N is sitting on a swing with her feet on the ground.

View solution

The child experiences an upward force from the ground of 130 N and an upward force from the swing of 290 N.

What is the resultant force on the child?

A 0 N **B** 260 N **C** 580 N **D** 840 N

© UCLES 2024

8 A builder lifts one concrete block from the ground onto a platform.

View solution

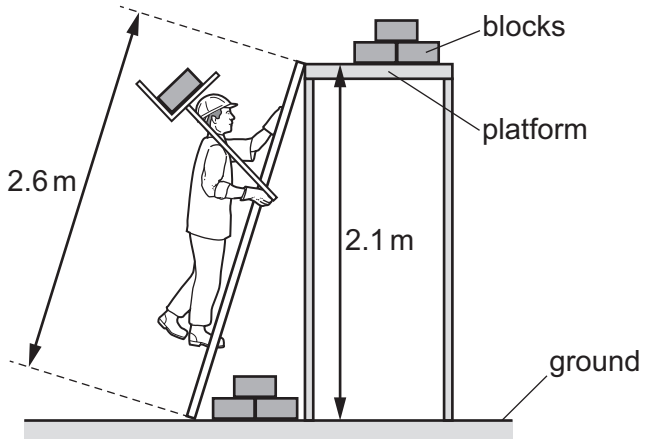

The weight of one block is 170 N.

What is the useful work done against gravity on one block?

A 360 J **B** 440 J **C** 360 W **D** 440 W

9 Students are asked for examples of water being used to store energy.

View solution

Three examples are listed.

1 energy stored in water waves

2 energy stored in tides

3 energy stored in water behind dams

Which examples describe water being used to store energy?

A 1, 2 and 3 **B** 1 and 2 only **C** 1 and 3 only **D** 2 and 3 only

10 Which statement about power is correct?

View solution

A Power is measured in joules.

B Power = energy × time.

C Power is the rate of energy transfer.

D Greater power always gives higher efficiency.

11 In which position does a person exert least pressure on the ground?

View solution

A kneeling on the ground

B lying flat on the ground

C sitting on the ground

D standing on the ground

© UCLES 2024

12 Which name is given to the change of state when steam at 100 °C changes to water at 100 °C?

View solution

A boiling

B condensation

C evaporation

D melting

13 A fixed mass of air is trapped inside a cylinder fitted with a moveable piston. The piston is slowly pushed in.

View solution

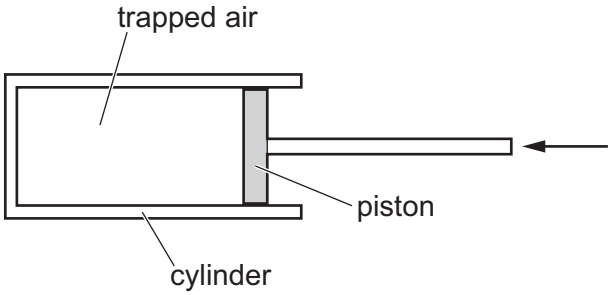

What happens to the pressure and the volume of the trapped air?

	pressure	volume
A	decreases	decreases
B	decreases	does not change
C	increases	decreases
D	increases	increases

14 The diagram shows electricity cables being put up on a warm day. The cables are suspended between the supporting pylons, as shown.

View solution

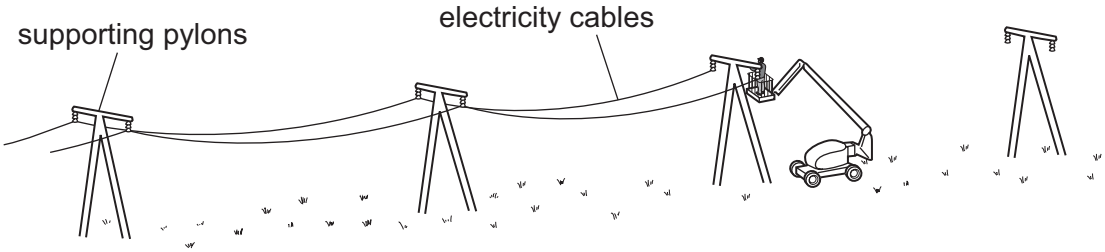

Why are the cables **not** tightened to make them higher above the ground?

A They will contract on cold days.

B They will contract on very warm days.

C They will expand on cold days.

D They will expand on very warm days.

© UCLES 2024

15 Which diagram shows the overall movement of particles and the temperature change when a liquid evaporates?

View solution

A

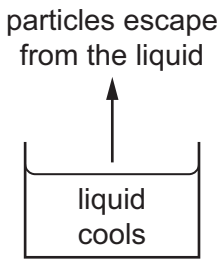

B

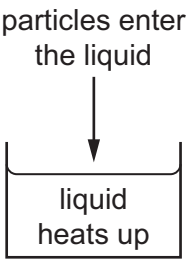

C

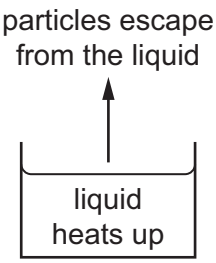

D

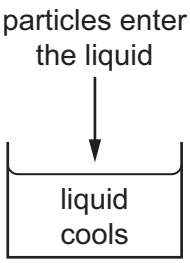

16 There is a vacuum between the double walls of a vacuum flask.

View solution

Which types of thermal transfer are reduced by the vacuum?

A conduction, convection and radiation

B conduction and convection only

C conduction and radiation only

D convection and radiation only

17 The diagram shows a transverse wave.

View solution

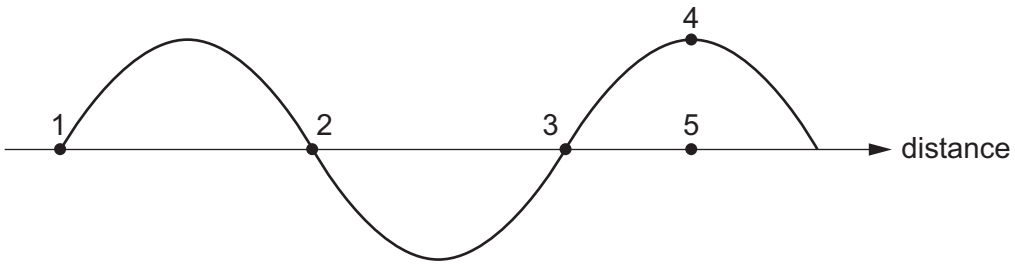

Which distance is equal to one wavelength?

A the distance between points 1 and 2

B the distance between points 1 and 3

C the distance between points 2 and 3

D the distance between points 4 and 5

© UCLES 2024

18 The diagram shows a wave before it reflects from a barrier.

View solution

Which labelled section of the diagram represents a wavefront?

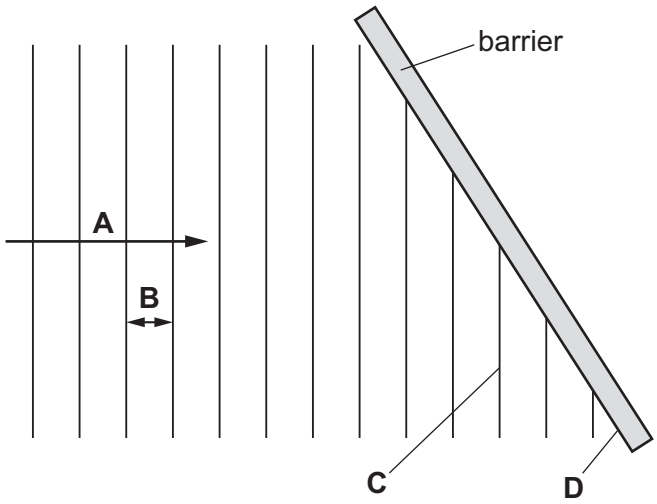

19 The diagram shows a ray of light as it passes from air into glass.

View solution

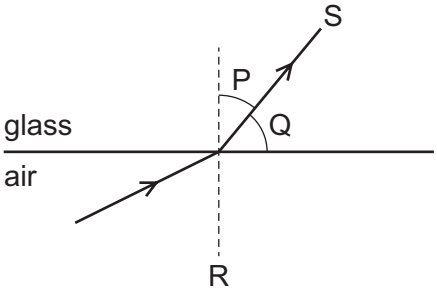

Which row shows the angle of refraction and the normal?

	angle of refraction	normal
A	P	R
B	P	S
C	Q	R
D	Q	S

20 The diagram shows rays of light passing through a converging lens.

View solution

Which labelled arrow represents the focal length of the lens?

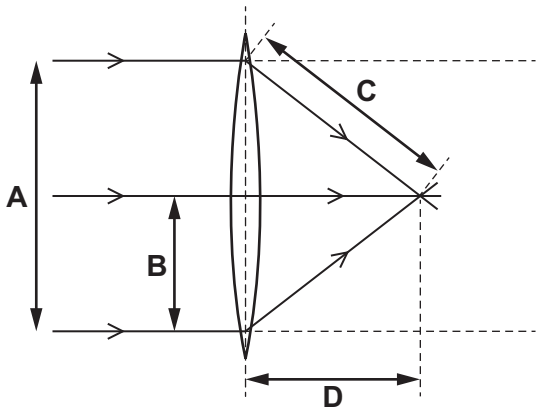

21 The diagram shows a narrow beam of white light being dispersed by a glass prism to produce a visible spectrum.

View solution

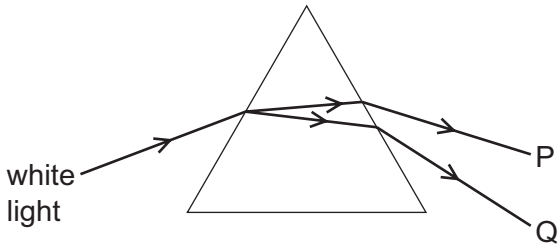

Which statement describes what happens to the frequency and wavelength of the light in observing from P to Q across the spectrum?

A The frequency and the wavelength both increase.

B The frequency and the wavelength both decrease.

C The frequency decreases but the wavelength increases.

D The frequency increases but the wavelength decreases.

22 The early Universe was filled with gamma radiation. Since then, the radiation has shifted to the microwave region of the electromagnetic spectrum.

View solution

How has this change affected the wavelength and speed of the radiation?

	wavelength	speed
A	decreased	decreased
B	decreased	stayed the same
C	increased	decreased
D	increased	stayed the same

© UCLES 2024

23 Sound waves may cause an echo.

View solution

What happens to sound waves to cause an echo and what is the nature of sound waves?

	what an echo is caused by	nature of sound waves
A	reflection	longitudinal
B	reflection	transverse
C	refraction	longitudinal
D	refraction	transverse

24 The diagram shows what happens when a bar PQ is brought near to a permanent magnet which is standing on a balance.

View solution

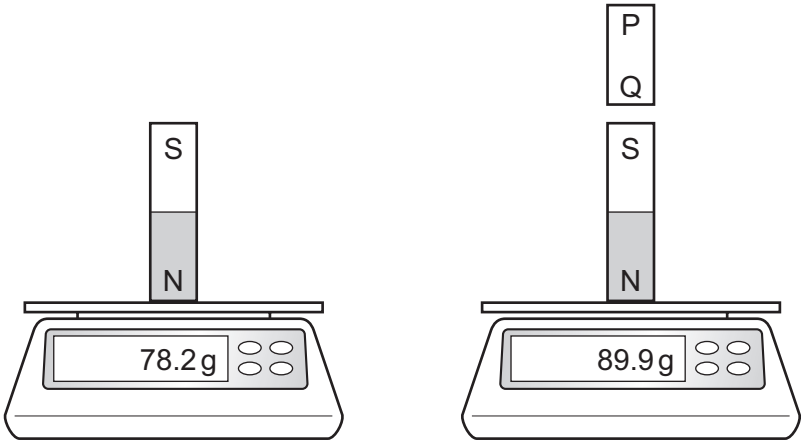

What could bar PQ be?

A an iron bar or a permanent magnet with P a N pole

B an iron bar or a permanent magnet with Q a N pole

C an iron bar only

D a permanent magnet only

25 Direct current (d.c.) can be represented on a voltage–time graph.

View solution

Which graph shows the correct waveform for a d.c. supply?

A

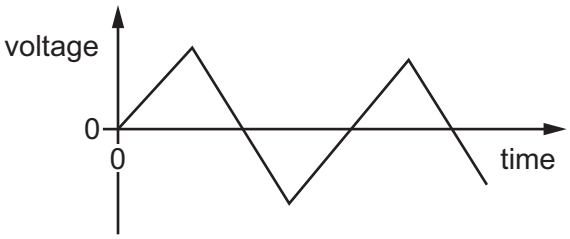

B

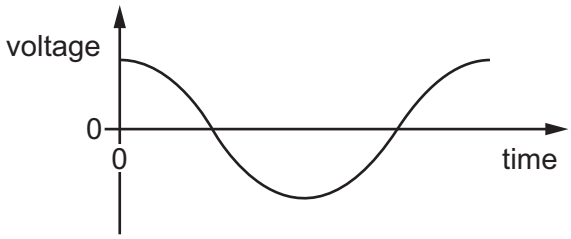

C

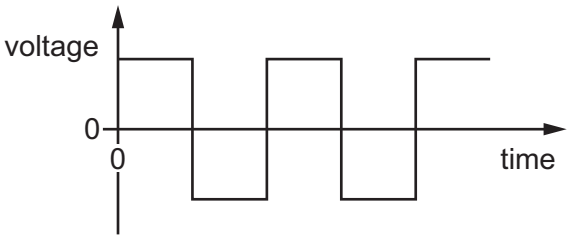

D

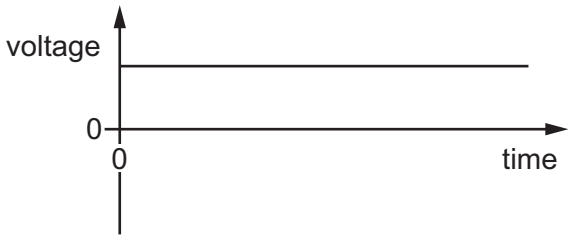

26 A resistor with a potential difference (p.d.) of 100 V across it carries a current of 5.0 mA.

View solution

What is the resistance of the resistor?

A 0.50 Ω **B** 20 Ω **C** 500 Ω **D** 20 000 Ω

27 The diagram shows the information label on an electric kettle.

View solution

[redacted]	
Voltage:	110 V a.c.
Power:	1500 W
Frequency:	50 Hz

What is the value of the current when the kettle is heating water?

A 0.073 A **B** 2.2 A **C** 3.7 A **D** 14 A

© UCLES 2024

28 Which circuit enables the resistance of the thermistor to be determined?

View solution

A

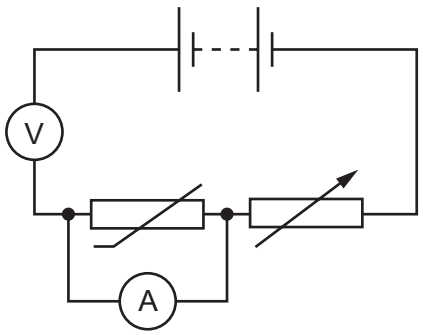

B

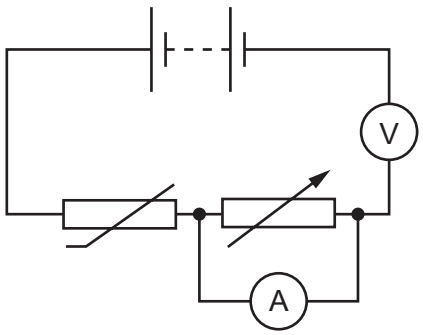

C

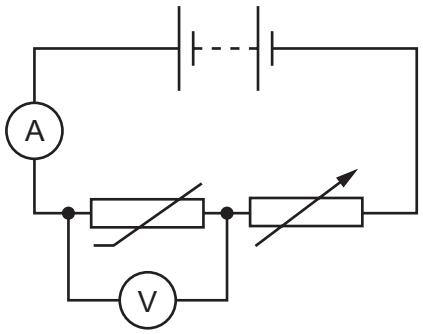

D

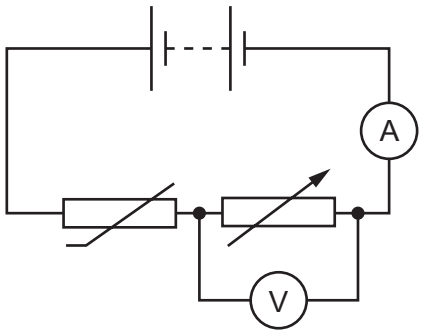

View solution

29 A student makes a battery by connecting five cells, as shown.

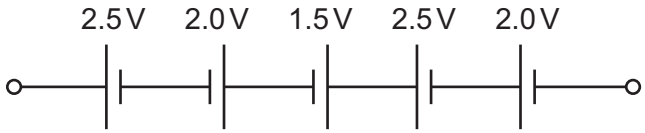

What is the electromotive force (e.m.f.) of the battery?

A 1.0 V **B** 2.1 V **C** 3.5 V **D** 10.5 V

30 The diagram shows the safety label on an electric oven.

View solution

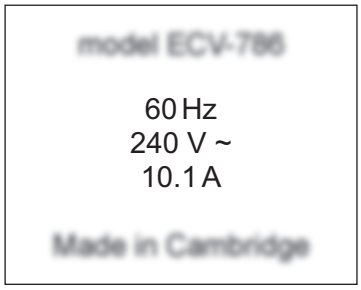

The oven is connected to a mains electric circuit. A fuse is placed in the circuit to protect the cabling and prevent overheating if there is fault.

Where should the fuse be placed and which rating should the fuse have?

	position of fuse	fuse rating / A
A	live wire	10
B	live wire	13
C	neutral wire	10
D	neutral wire	13

31 A straight wire is stationary between the poles of a magnet.

View solution

It lies perpendicular to the magnetic field.

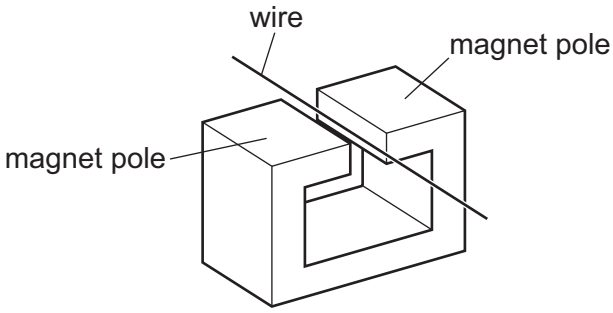

Which action does **not** induce an e.m.f. in the wire?

A moving the magnet up towards the top of the page and the wire down towards the bottom of the page

B moving the magnet up towards the top of the page only

C moving the wire and the magnet up towards the top of the page at the same speed

D moving the wire down towards the bottom of the page only

© UCLES 2024

32 The diagram shows a wire hanging vertically between the poles of a magnet.

View solution

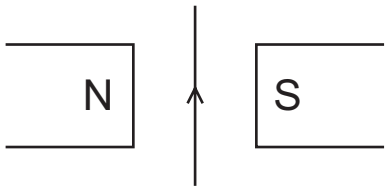

There is a current in the wire in the direction shown. The wire moves into the plane of the page away from the observer.

In which direction does the wire move when the current is reversed?

A The wire moves into the plane of the page, away from the observer.

B The wire moves to the left.

C The wire moves to the right.

D The wire moves out of the plane of the page, towards the observer.

33 A current-carrying coil in a magnetic field experiences a turning effect.

View solution

Students are asked how the turning effect can be increased.

Three suggestions are listed.

1 decreasing the number of turns on the coil

2 increasing the current

3 increasing the strength of the magnetic field

Which suggestions will increase the turning effect?

A 1, 2 and 3 **B** 1 and 2 only **C** 1 and 3 only **D** 2 and 3 only

34 A student suggests three sources of naturally occurring background radiation.

View solution

1 cosmic rays

2 medical X-rays

3 radioactive emissions from radon gas from the ground

Which suggestions are correct?

A 1 and 3 **B** 1 only **C** 2 and 3 **D** 2 only

© UCLES 2024

35 A student measures the rate at which ionising radiation is emitted from a radioactive substance.

He places a detector at different distances from the radioactive source.

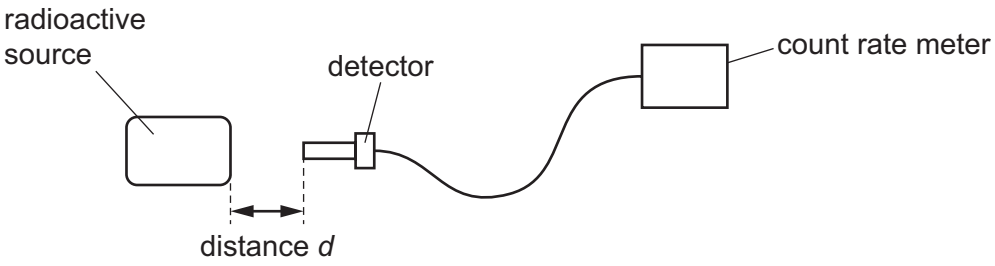

The table shows how the count rate from the source varies with distance *d*.

distance *d* / cm	0	2	4	6
count rate / counts per minute	1250	115	0	0

Which type of ionising radiation is being emitted by the substance?

A α-particles

B β-particles

C γ-rays

D X-rays

36 Radioactive decay results in the emission of α-particles, β-particles and γ-radiation.

Which types of emission result in a nucleus changing to that of a different element?

A α-particle emission and β-particle emission

B α-particle emission and γ-radiation emission

C β-particle emission and γ-radiation emission

D γ-radiation emission only

37 A radioactive isotope has a half-life of 120 minutes.

It emits radiation at a rate of 100 particles per second.

How long does it take for the rate of emission to fall to 25 particles per second?

A 30 minutes **B** 45 minutes **C** 90 minutes **D** 240 minutes

© UCLES 2024

38 The diagram shows part of a solar system.

View solution

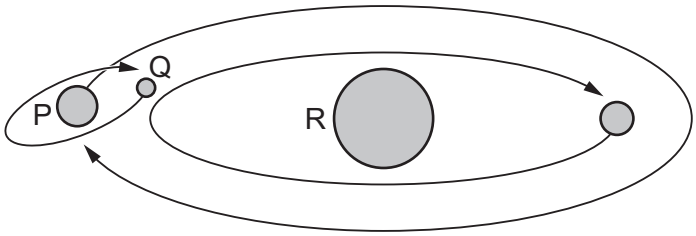

Which row correctly identifies the bodies P, Q and R?

	P	Q	R
A	moon	planet	star
B	planet	moon	star
C	planet	star	moon
D	star	planet	moon

39 Which statement about the Sun is **not** correct?

View solution

A The Sun is one of the biggest stars.

B The Sun emits ultraviolet radiation.

C The Sun emits infrared radiation.

D Helium is present in the Sun.

40 Which statement about the Milky Way galaxy is correct?

View solution

A It contains stars that are about the same distance from the Earth as the Sun.

B It is a collection of about 1000 stars that can be seen from the Earth.

C It is the galaxy that contains the Sun and the Earth.

D Its diameter is about 1 light-year.

Permission to reproduce items where third-party owned material protected by copyright is included has been sought and cleared where possible. Every reasonable effort has been made by the publisher (UCLES) to trace copyright holders, but if any items requiring clearance have unwittingly been included, the publisher will be pleased to make amends at the earliest possible opportunity.

To avoid the issue of disclosure of answer-related information to candidates, all copyright acknowledgements are reproduced online in the Cambridge Assessment International Education Copyright Acknowledgements Booklet. This is produced for each series of examinations and is freely available to download at www.cambridgeinternational.org after the live examination series.

Cambridge Assessment International Education is part of Cambridge Assessment. Cambridge Assessment is the brand name of the University of Cambridge Local Examinations Syndicate (UCLES), which is a department of the University of Cambridge.

© UCLES 2024