Cambridge Assessment International Education

Cambridge IGCSE™

PHYSICS **0625/22**

Paper 2 Multiple Choice (Extended) **October/November 2024**

45 minutes

You must answer on the multiple choice answer sheet.

You will need: Multiple choice answer sheet
Soft clean eraser
Soft pencil (type B or HB is recommended)

INSTRUCTIONS

- There are **forty** questions on this paper. Answer **all** questions.
- For each question there are four possible answers **A**, **B**, **C** and **D**. Choose the **one** you consider correct and record your choice in soft pencil on the multiple choice answer sheet.
- Follow the instructions on the multiple choice answer sheet.
- Write in soft pencil.
- Write your name, centre number and candidate number on the multiple choice answer sheet in the spaces provided unless this has been done for you.
- Do **not** use correction fluid.
- Do **not** write on any bar codes.
- You may use a calculator.
- Take the weight of 1.0 kg to be 9.8 N (acceleration of free fall = 9.8 m / s^2).

INFORMATION

- The total mark for this paper is 40.
- Each correct answer will score one mark.
- Any rough working should be done on this question paper.

This document has **20** pages. Any blank pages are indicated.

© UCLES 2024

1 Two forces with magnitudes F_1 and F_2 act on an object at right angles to each other.

View solution

What is the magnitude of the resultant force?

A $\sqrt{F_1^2 + F_2^2}$ **B** $\sqrt{F_1} + \sqrt{F_2}$ **C** $\sqrt{F_1^2} + \sqrt{F_2^2}$ **D** $\sqrt{F_1 + F_2}$

2 A boy takes 30 minutes to cycle a distance of 8.0 km. He then walks a further distance of 2.0 km in 15 minutes.

View solution

What is his average speed?

A 4.5 km / h **B** 5.6 km / h **C** 12 km / h **D** 13 km / h

3 A small, light ball is dropped from the top of a tall building.

View solution

Which graph shows how the speed of the ball changes with time?

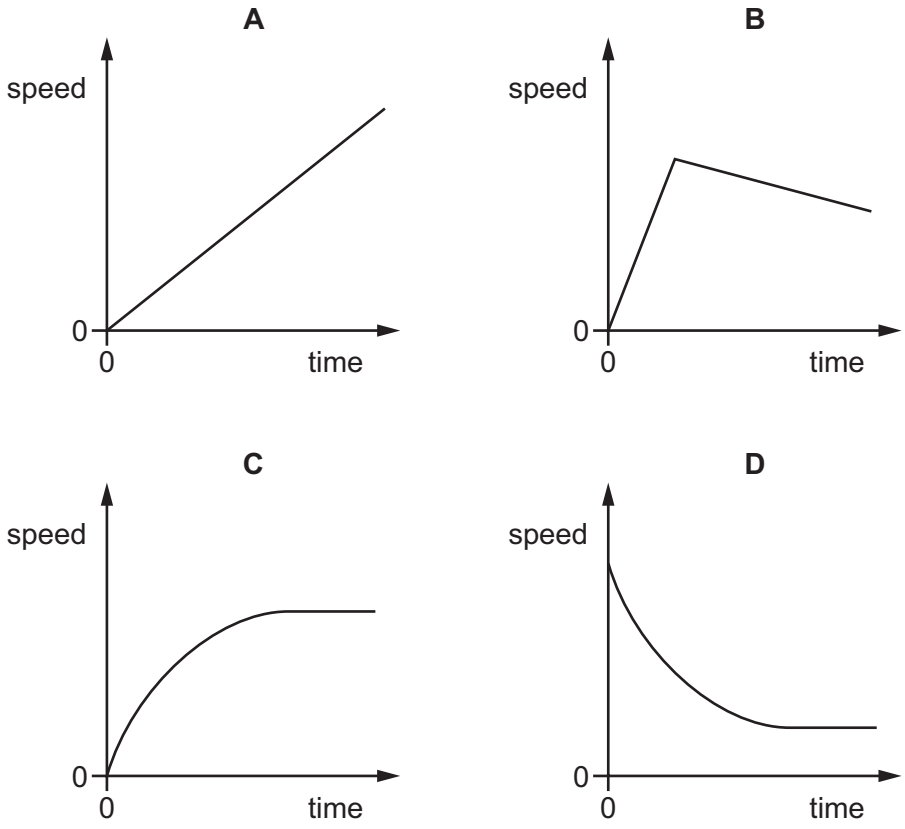

4 Which statement about gravitational field strength is **not** correct?

View solution

A It changes the mass of an object.

B It is equivalent to the acceleration of free fall.

C It is measured in N / kg.

D Its magnitude is different on other planets in our Solar system.

© UCLES 2024

5 Three liquids P, Q and R have different densities and do not mix. The liquids are placed in a measuring cylinder and allowed to settle. A small block is then dropped into the measuring cylinder and comes to rest, as shown.

View solution

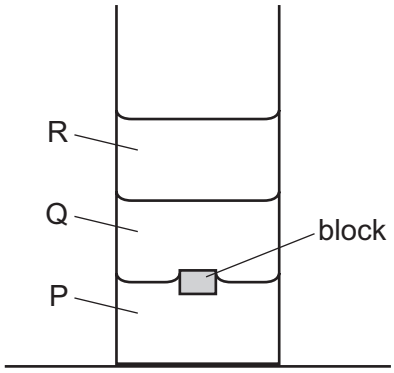

Which statement about the density of the block is correct?

A It is equal to the density of Q.

B It is greater than the density of P.

C It is greater than the density of R.

D It is less than the density of Q.

View solution

6 The diagram shows a uniform beam pivoted at its centre.

A student applies two forces, F_1 and F_2, as shown.

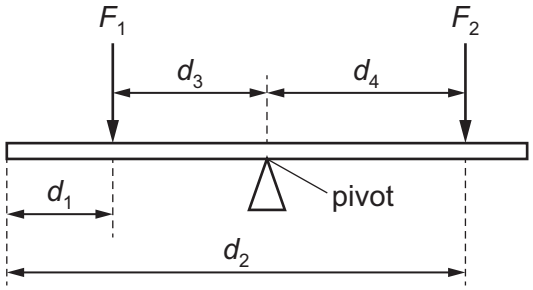

Which row is correct?

	clockwise moment about the pivot	anticlockwise moment about the pivot
A	F_2d_2	F_1d_1
B	F_2d_2	F_1d_3
C	F_2d_4	F_1d_1
D	F_2d_4	F_1d_3

© UCLES 2024

7 Which expression can be used to determine the impulse on a tennis ball?

View solution

A force × time

B $\frac{\text{momentum}}{\text{time}}$

C mass × initial velocity

D mass × acceleration

8 Which row shows the process by which energy in the Sun is released, the process by which it is transferred to the Earth and a way in which it is stored once it reaches the Earth?

View solution

	process by which energy is released in the Sun	process by which the energy is transferred from the Sun to the Earth	a method by which the energy is stored on the Earth
A	fission	convection	biofuel
B	fusion	radiation	nuclear fuel
C	fusion	convection	nuclear fuel
D	fusion	radiation	biofuel

9 An object has a mass of 20 kg.

View solution

It is taken up stairs through a height of 4.0 m.

What is the increase in the store of gravitational potential energy?

A 5.0 J **B** 49 J **C** 80 J **D** 780 J

© UCLES 2024

10 An electrician uses a lifting machine, as shown. The lifting machine takes 4.5 s to lift the electrician a vertical height of 3.2 m.

View solution

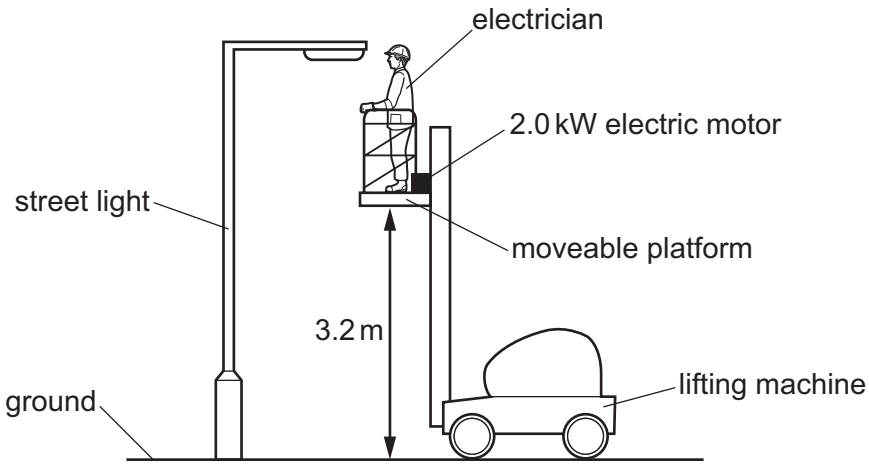

The mass of the electrician is 72 kg.

The energy for the lifting machine is supplied by a 2.0 kW electric motor.

What is the efficiency of the lifting machine?

A 0.026 **B** 0.25 **C** 0.50 **D** 0.75

11 Some altimeters use the change in air pressure to measure height.

View solution

If the pressure is 100 kPa at sea level on a particular day, what will the pressure be at the top of an 830 m hill?

(Take the density of air to be constant at 1.3 kg / m^3.)

A 1.1 kPa **B** 11 kPa **C** 89 kPa **D** 110 kPa

12 Water can exist in three states: solid (ice), liquid (liquid water) and gas (steam).

View solution

In which states is the motion of the water particles **only** vibrational?

A liquid water and ice

B liquid water only

C ice only

D steam only

© UCLES 2024

13 A cube has sides 2.0 m long. The cube contains a gas at a pressure of 8000 N / m^2.

View solution

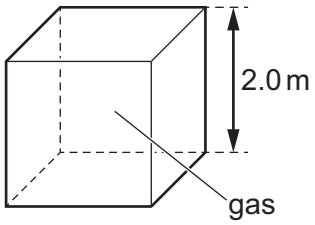

A second cube has sides 4.0 m long. This cube contains the same mass of the same gas as the first cube, at the same temperature.

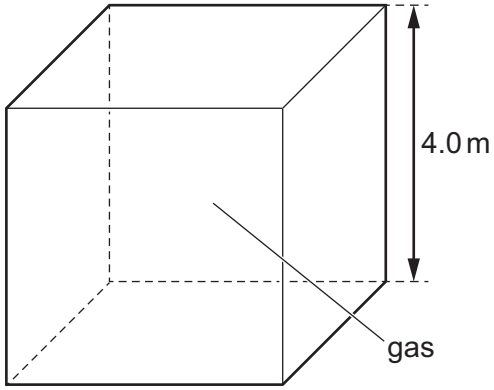

What is the pressure of the gas in the second cube?

A 1000 N / m^2 **B** 4000 N / m^2 **C** 16 000 N / m^2 **D** 64 000 N / m^2

14 Which row gives the correct name for each change of state shown?

View solution

	gas to liquid	liquid to solid	solid to liquid
A	condensation	melting	solidification
B	condensation	solidification	melting
C	evaporation	melting	solidification
D	evaporation	solidification	melting

15 In an experiment to measure specific heat capacity, a block of aluminium is heated and its rise in temperature is measured.

The internal energy gained by the block is ΔE. The mass of the block is m. The rise in temperature of the block is ΔT.

View solution

Which expression gives the specific heat capacity of aluminium?

A $\frac{m}{\Delta E \Delta T}$ **B** $\frac{m\Delta T}{\Delta E}$ **C** $\frac{\Delta E}{m\Delta T}$ **D** $\frac{\Delta E \Delta T}{m}$

© UCLES 2024

16 Which statement about the transfer of thermal energy is correct?

View solution

A All metals conduct thermal energy equally well.

B Convection can only occur in solids or liquids.

C Convection occurs in liquids because hot liquid is more dense than cold liquid.

D The radiation that transfers thermal energy is a type of electromagnetic radiation.

17 What is the number of wavefronts per second that pass a fixed point?

View solution

A the amplitude of the wave

B the frequency of the wave

C the speed of the wave

D the wavelength of the wave

18 An earthquake under the ocean can produce a dangerous water wave called a tsunami.

View solution

The table gives typical data for a tsunami.

ocean depth / m	velocity / km / h	wavelength / km
7000	948	285
2000	504	151

A student suggests three conclusions about the data.

1 The deeper the ocean, the faster the wave.

2 The longer the wavelength, the faster the wave.

3 The faster the wave, the higher the frequency.

Which conclusions are correct?

A 1, 2 and 3 **B** 1 and 2 only **C** 1 and 3 only **D** 2 and 3 only

© UCLES 2024

19 The diagram shows what happens to wavefronts at sea when they enter a harbour.

View solution

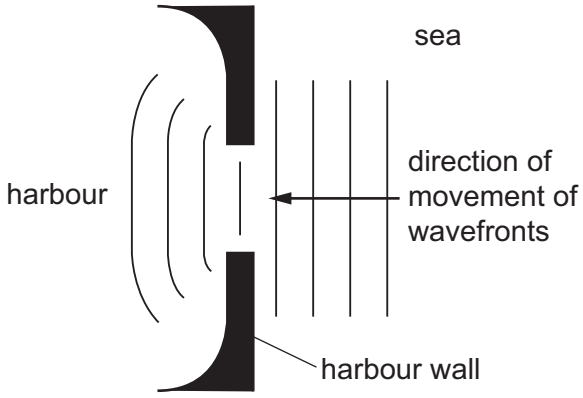

What causes the change in the shape of the wavefronts?

A diffraction

B dispersion

C reflection

D refraction

20 A ray of light passes from air into glass.

View solution

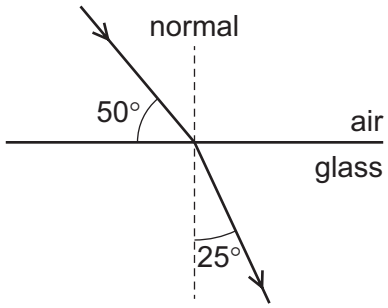

What are the angles of incidence and refraction of the ray?

	angle of incidence / °	angle of refraction / °
A	40	25
B	40	65
C	50	25
D	50	65

© UCLES 2024

21 An object is placed in front of a converging lens. The lens has a focal length *f*.

View solution

The lens produces a real, enlarged image of the object.

In which labelled position is the object placed?

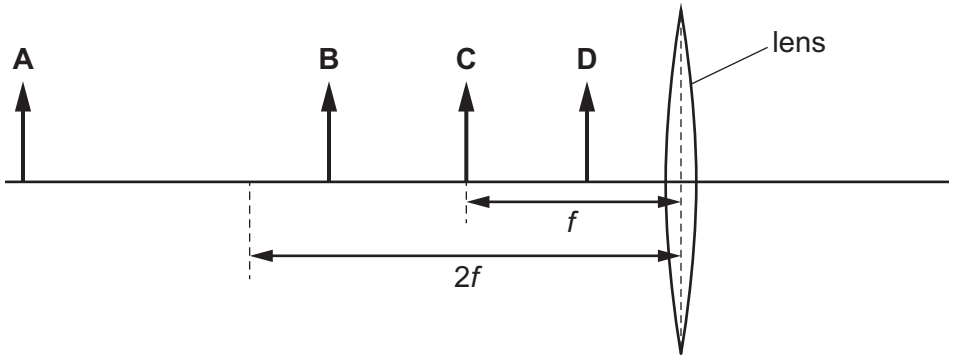

22 What is the speed of electromagnetic waves in a vacuum?

View solution

A 300 m / s

B 300 km / s

C 300 000 km / s

D 300 000 000 km / s

23 The starter in an athletics race fires the starting pistol. There is a wall 60 m from the starter.

View solution

Take the speed of sound as 330 m / s.

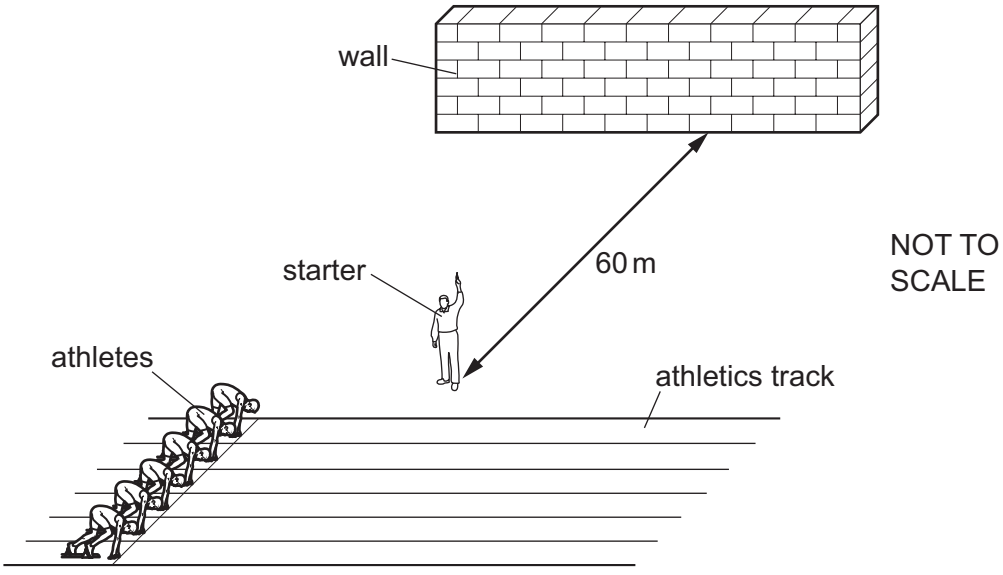

How long after firing the pistol does the starter hear the echo of the sound from the wall?

A 0.18 s **B** 0.36 s **C** 2.8 s **D** 5.5 s

© UCLES 2024

24 The diagram shows the magnetic field around a conductor which is carrying a current.

View solution

Where is the strength of the field greatest?

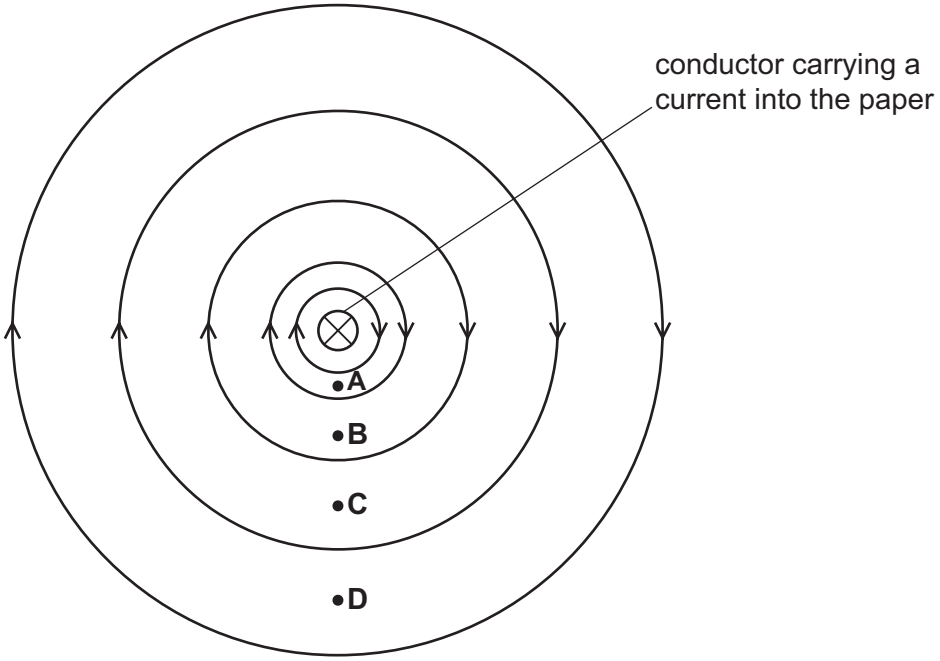

25 A positive ion in a vacuum moves at a steady speed in a straight line.

There is a potential difference between the two parallel metal plates P and Q so that they are oppositely charged.

When the positive ion enters the region between plates P and Q, it changes direction as shown.

The diagram shows the view from above the ion.

View solution

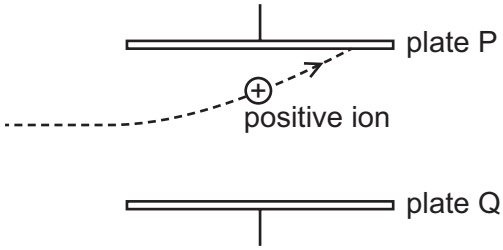

Which diagram shows the direction of the electric field between the plates?

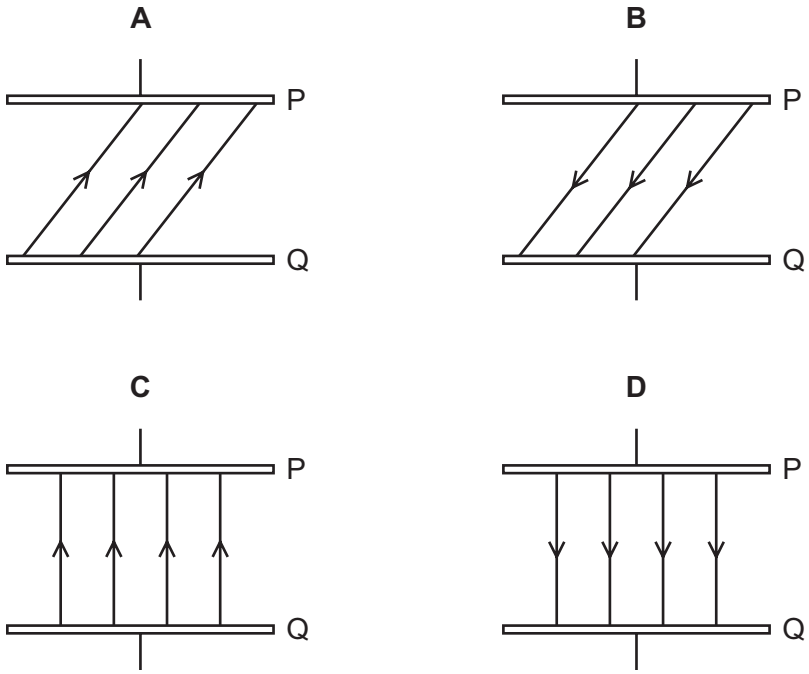

26 In the circuit shown, the voltmeter reads 2.0 V. A charge of 5.0 C passes through the resistor in a certain time.

View solution

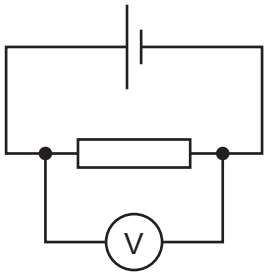

How much energy is supplied to the resistor in this time?

A 0.40 J **B** 2.5 J **C** 10 J **D** 20 J

© UCLES 2024

27 Which diagram shows the current–voltage (I–V) graph for a filament lamp?

View solution

A

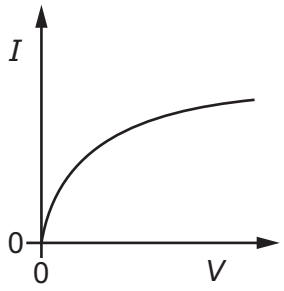

B

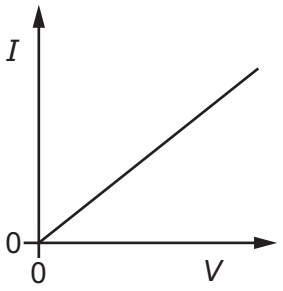

C

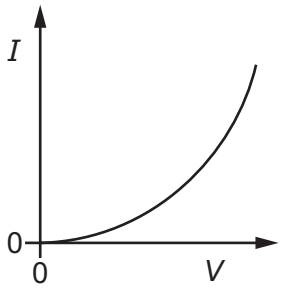

D

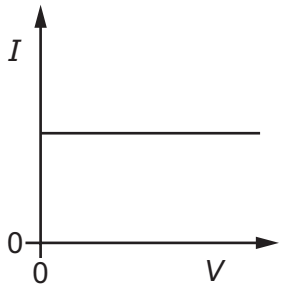

View solution

28 The diagram shows an electrical circuit.

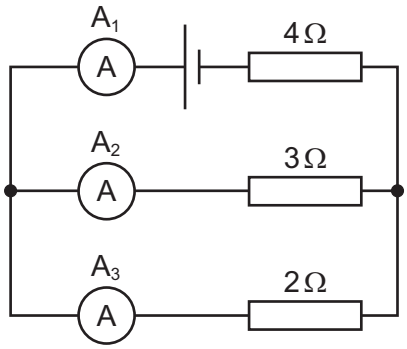

Which statement is correct?

A The current reading on ammeter A_1 is the highest.

B The current reading on ammeter A_2 is the highest.

C The current reading on ammeter A_3 is the highest.

D The current readings on all three ammeters A_1, A_2 and A_3 are the same.

© UCLES 2024

29 The diagram shows an arrangement of resistors in series and parallel.

View solution

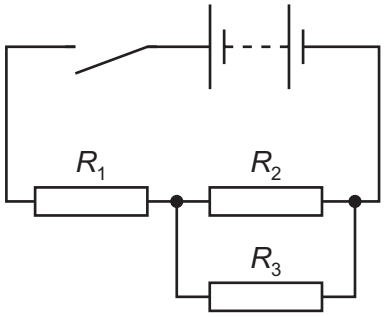

Which equation is used to calculate the combined resistance of the resistors?

A $R_1 + \dfrac{R_2 + R_3}{R_2 \times R_3}$

B $R_1 + \dfrac{R_2 \times R_3}{R_2 + R_3}$

C $R_1 + \dfrac{1}{R_2 + R_3}$

D $R_1 \times \dfrac{R_2 + R_3}{R_2 \times R_3}$

30 An electrical engineer has made a pair of components P and Q.

View solution

The resistance of P decreases as the temperature rises. The resistance of Q increases as the temperature rises.

The total resistance of P and Q in series remains constant when the temperature changes. The two components are connected in series with a power source supplying a constant current.

Which statement is correct?

A If a temperature change causes the potential difference (p.d.) across P to double, the p.d. across Q will always halve.

B The difference between the p.d. across P and the p.d. across Q does not change with temperature.

C The p.d. across component P increases as the temperature rises.

D The sum of the p.d. across P and the p.d. across Q does not change with temperature.

© UCLES 2024

31 The diagram shows a wire XY moving upwards in a magnetic field.

View solution

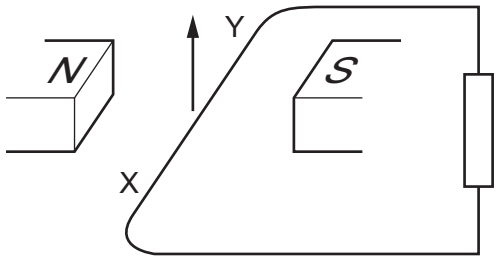

A current is induced in the wire.

The current-carrying wire XY experiences a force because of its interaction with the magnetic field.

Which row gives the direction of the induced current and the direction of the force experienced by the wire XY?

	direction of induced current	direction of the force
A	from X to Y	downwards
B	from X to Y	upwards
C	from Y to X	downwards
D	from Y to X	upwards

© UCLES 2024

32 Diagram 1 shows a magnet being pushed into a coil that is connected to a centre-zero sensitive voltmeter.

View solution

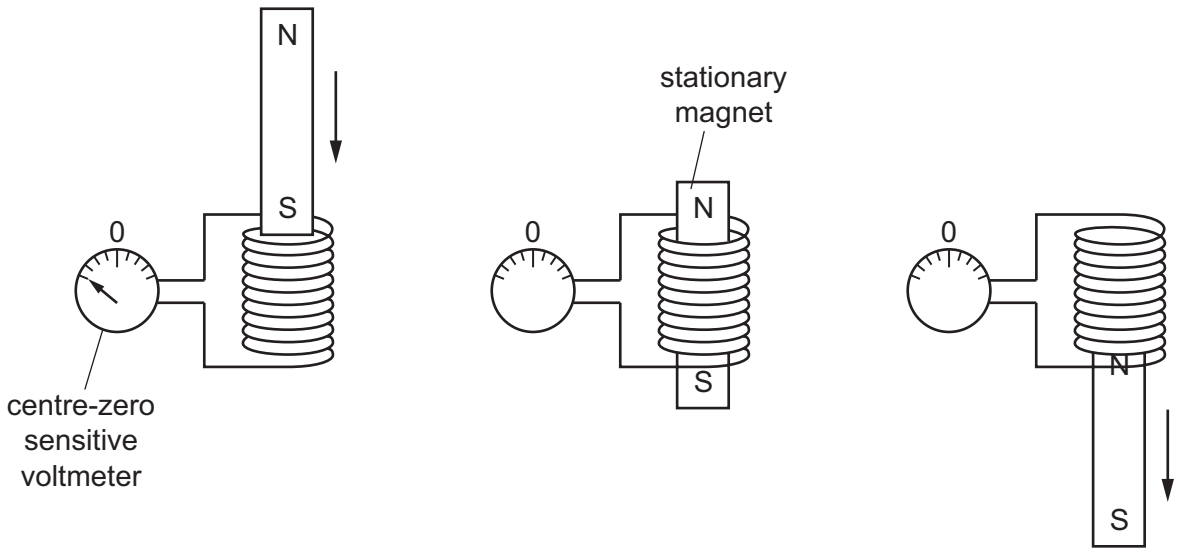

diagram 1 diagram 2 diagram 3

Which row shows the directions of the pointer on the voltmeter when the magnet is as shown in diagrams 2 and 3?

	diagram 2	diagram 3
A		
B		
C		
D		

33 What is the purpose of the brushes and the split-ring commutator in a d.c. motor?

View solution

A to change the size of the current

B to keep the coil turning in the same direction

C to keep the speed of rotation constant

D to make the output an alternating voltage

© UCLES 2024

34 The diagram shows β-particles being directed between the poles of a magnet.

View solution

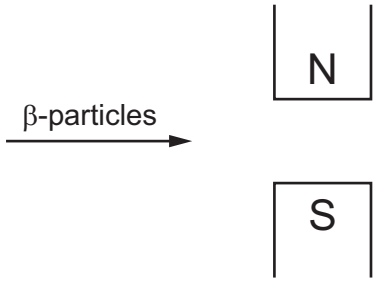

In which direction will the particles be deflected?

A into the page

B out of the page

C towards the bottom of the page

D towards the top of the page

35 An α-particle and a β-particle have the same kinetic energy.

View solution

Why does the α-particle have a larger ionising effect than the β-particle as it passes through air?

A The α-particle has a larger charge and a larger velocity so is closer to an air particle for a shorter time.

B The α-particle has a larger charge and a smaller velocity so is closer to an air particle for a longer time.

C The α-particle has a smaller charge and a larger velocity so is closer to an air particle for a shorter time.

D The α-particle has a smaller charge and a smaller velocity so is closer to an air particle for a longer time.

© UCLES 2024

36 A student is carrying out an experiment to measure the radiation from a radioactive source.

He uses a radiation detector and records the total counts in 5-minute intervals. He does this three times with the source present and three times with the source absent. Here are his results.

View solution

total counts in 5 minutes with source present	total counts in 5 minutes with source absent
68	25
73	28
69	22

What is the average corrected count rate for the source?

A 5 counts / minute

B 9 counts / minute

C 25 counts / minute

D 45 counts / minute

37 The count rate measured near a radioactive source drops from 542 counts per minute to 94 counts per minute in 12 hours. The background count remains constant at 30 counts per minute.

View solution

What is the half-life of the source?

A 2 hours **B** 3 hours **C** 4 hours **D** 8 hours

38 What happens when a protostar becomes a stable star?

View solution

A Most of the hydrogen is converted to helium and the protostar expands.

B The inward force due to gravity is balanced by an outward force due to the high temperature.

C The protostar collapses due to gravity and the temperature increases.

D The protostar runs out of hydrogen as fuel for the nuclear reaction.

© UCLES 2024

39 The table gives information about some of the planets in our Solar System.

View solution

planet	mass compared with the Earth	average density / g/cm^3	gravitational field strength at surface / N/kg
Earth	1.0	5.5	9.8
Jupiter	320	1.3	25
Mercury	0.060	5.4	3.8
Uranus	15	1.3	10

Which statement about these planets is correct?

A As the mass compared with the Earth increases, the average density increases.

B As the mass compared with the Earth increases, the gravitational field strength increases.

C As the average density increases, the gravitational field strength decreases.

D The average density is directly proportional to the gravitational field strength.

40 Which quantity is an estimate of the age of the Universe?

View solution

A H_0 **B** $d \times H_0$ **C** $\frac{1}{H_0}$ **D** $v \times H_0$

© UCLES 2024

BLANK PAGE

BLANK PAGE

Permission to reproduce items where third-party owned material protected by copyright is included has been sought and cleared where possible. Every reasonable effort has been made by the publisher (UCLES) to trace copyright holders, but if any items requiring clearance have unwittingly been included, the publisher will be pleased to make amends at the earliest possible opportunity.

To avoid the issue of disclosure of answer-related information to candidates, all copyright acknowledgements are reproduced online in the Cambridge Assessment International Education Copyright Acknowledgements Booklet. This is produced for each series of examinations and is freely available to download at www.cambridgeinternational.org after the live examination series.

Cambridge Assessment International Education is part of Cambridge Assessment. Cambridge Assessment is the brand name of the University of Cambridge Local Examinations Syndicate (UCLES), which is a department of the University of Cambridge.

© UCLES 2024