Cambridge Assessment International Education

Cambridge IGCSE™

CANDIDATE NAME									
CENTRE NUMBER						CANDIDATE NUMBER				

PHYSICS **0625/31**

Paper 3 Theory (Core) **October/November 2024**

1 hour 15 minutes

You must answer on the question paper.

No additional materials are needed.

INSTRUCTIONS

- Answer **all** questions.
- Use a black or dark blue pen. You may use an HB pencil for any diagrams or graphs.
- Write your name, centre number and candidate number in the boxes at the top of the page.
- Write your answer to each question in the space provided.
- Do **not** use an erasable pen or correction fluid.
- Do **not** write on any bar codes.
- You may use a calculator.
- You should show all your working and use appropriate units.
- Take the weight of 1.0 kg to be 9.8 N (acceleration of free fall = 9.8 m / s^2).

INFORMATION

- The total mark for this paper is 80.
- The number of marks for each question or part question is shown in brackets [ ].

This document has **16** pages.

© UCLES 2024

1 Fig. 1.1 shows the speed–time graph for a cyclist riding a bicycle.

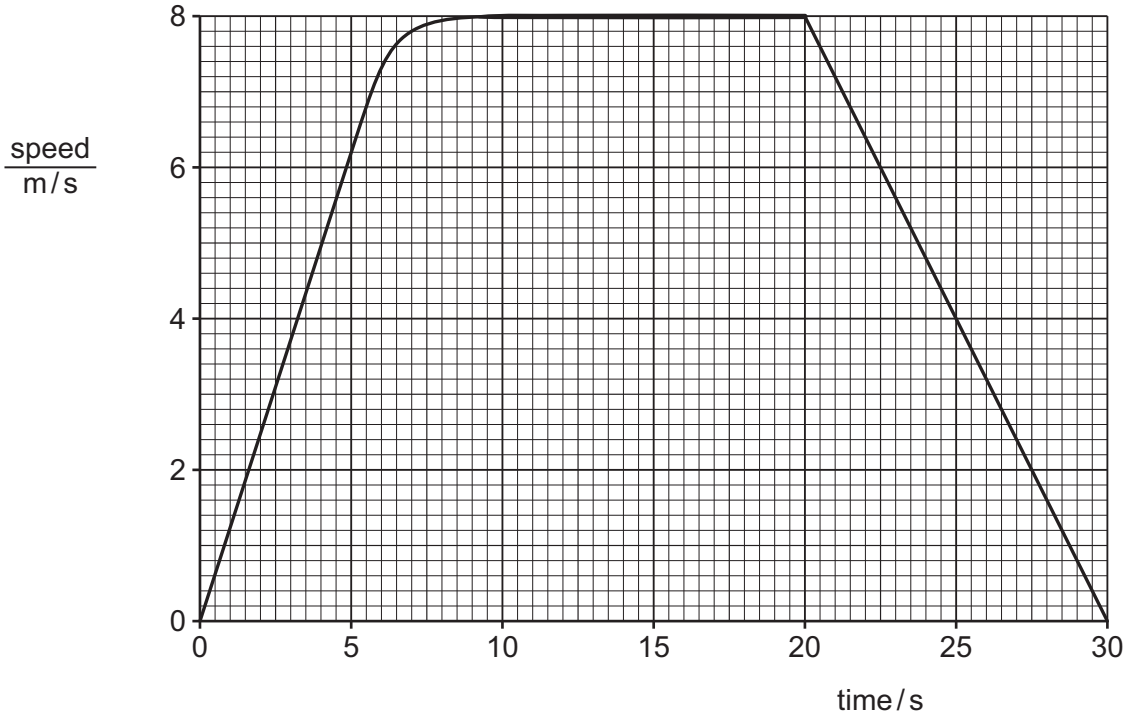

Fig. 1.1

(a) State the speed of the cyclist at time = 15 s.

View solution

speed of cyclist = ... m/s [1]

(b) Describe the motion of the cyclist

View solution

1. from time = 0 to time = 5 s .....

2. from time = 10 s to time = 20 s .....

3. from time = 20 s to time = 30 s .....

[3]

(c) Calculate the distance travelled by the cyclist from time = 20 s to time = 30 s.

View solution

distance = ... m [3]

[Total: 7]

© UCLES 2024

2 A person pushes a pushchair. A young child rides in the pushchair. Fig. 2.1 shows horizontal forces acting on the front wheel of the pushchair.

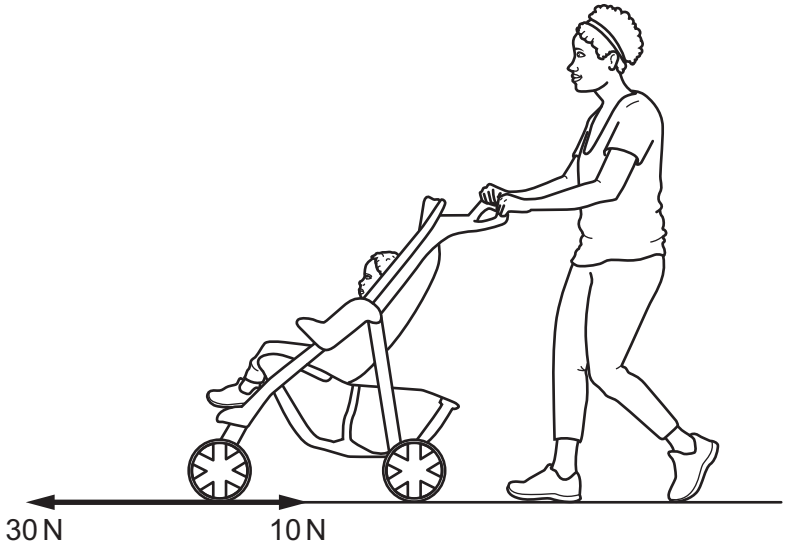

Fig. 2.1 (not to scale)

(a) Calculate the resultant of the horizontal forces shown in Fig. 2.1.

View solution

resultant force = ... N

direction = ...

[2]

(b) (i) Another person pushes a shopping trolley with a force of 40 N. The shopping trolley moves at a constant speed along a horizontal path.

Calculate the work done by the 40 N force to move the shopping trolley a distance of 50 m.

View solution

work done = ... J [3]

(ii) The work done on the shopping trolley as it starts moving is transferred into other energy stores.
State **two** such energy stores.

View solution

1 .....

2 .....

[2]

(c) In **(a)**, the weight of the pushchair and child is 240 N.
The total area of contact with the ground is 38 cm^2.

View solution

Calculate the pressure on the ground due to the pushchair and child.

pressure on ground = ... N/cm^2 [3]

[Total: 10]

© UCLES 2024

3 A student determines the density of a metal. Fig. 3.1 shows an irregularly shaped piece of the metal and some equipment.

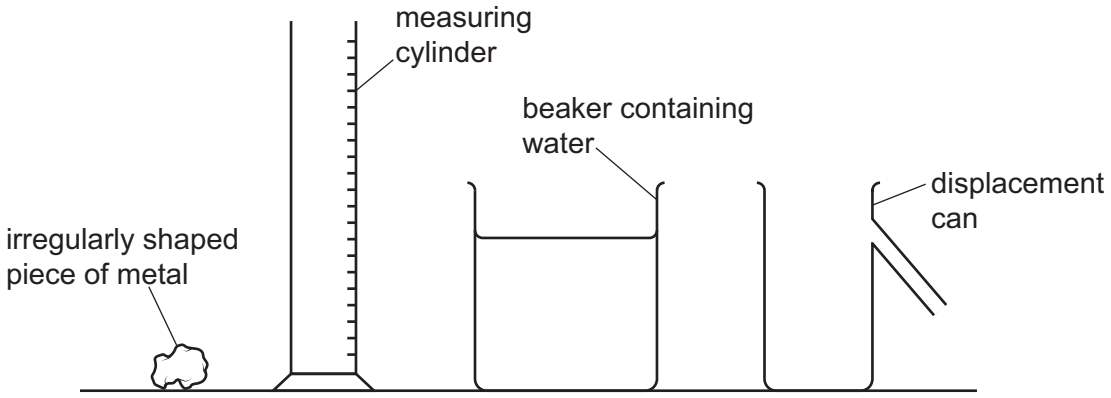

Fig. 3.1

(a) Describe how the student can find the volume of the piece of metal.

View solution

In your answer you may refer to some or all of the equipment shown in Fig. 3.1.

.....

.....

.....

.....

.....

..... [4]

(b) The mass of another piece of the metal is 350 g. The volume of this piece of metal is 18 cm^3.

Calculate the density of the metal.

View solution

density = ... g/cm^3 [3]

[Total: 7]

4 **(a)** Fig. 4.1 shows the energy transfers in a lamp.

View solution

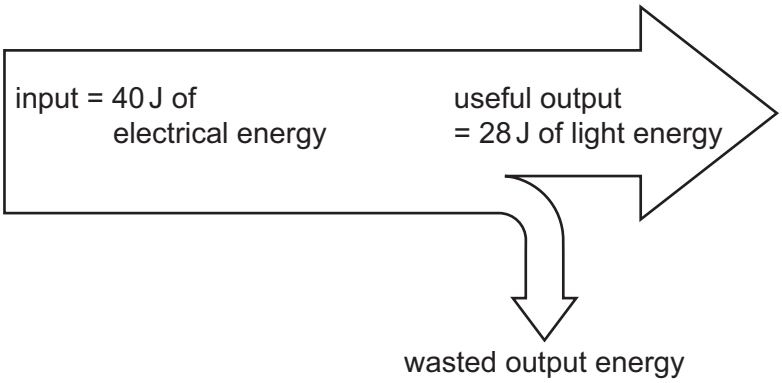

Fig. 4.1 (not to scale)

(i) State the value of the wasted output energy.

wasted output energy = ... J [1]

(ii) The energy that is wasted is transferred to an energy store. State the energy store that is increased by the wasted energy.

..... [1]

(b) A 15 W lamp is switched on for 5.0 minutes.

View solution

Calculate the electrical work done in the lamp circuit during this time.

electrical energy supplied = ... J [4]

(c) The lamp uses electrical energy that is generated by a wind turbine.
Fig. 4.2 shows a wind turbine.

View solution

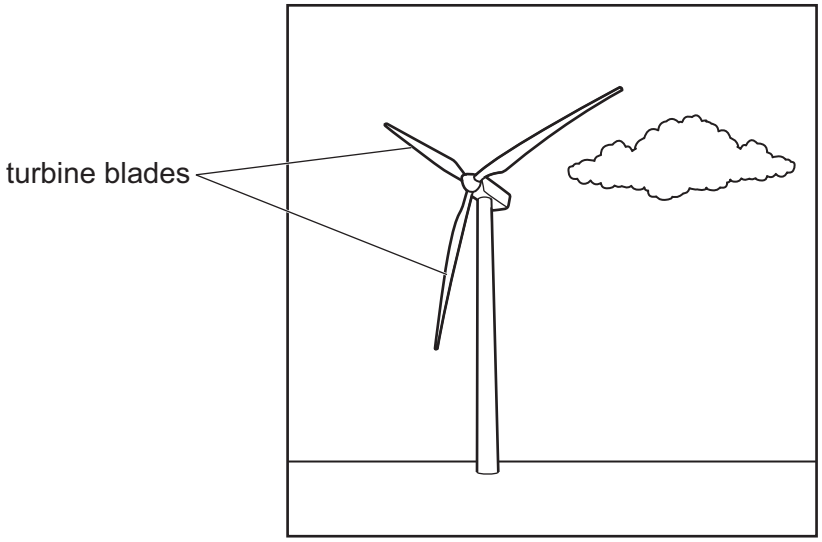

Fig. 4.2

Describe **three** energy transfers that take place when energy from the Sun causes electrical energy to be generated by the wind turbine.

.....

.....

..... [3]

[Total: 9]

5 Fig. 5.1 shows a metal box. The air in the box is at room temperature, 20 °C.
Air cannot leave or enter the box.

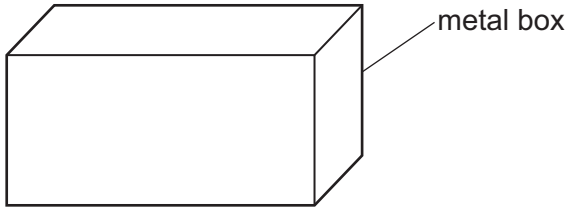

Fig. 5.1

View solution

(a) Describe the motion, separation and arrangement of the air particles in the metal box.

.....

.....

..... [3]

(b) A student puts the box in a freezer. The temperature of the air in the box decreases.

Describe the changes in the motion of the air particles in the box when the temperature decreases.

.....

..... [2]

[Total: 5]

View solution

6 Fig. 6.1 shows some students near some rocky cliffs looking at a boat at sea. The students watch a firework display on the boat. One of the fireworks bursts and makes a loud sound.

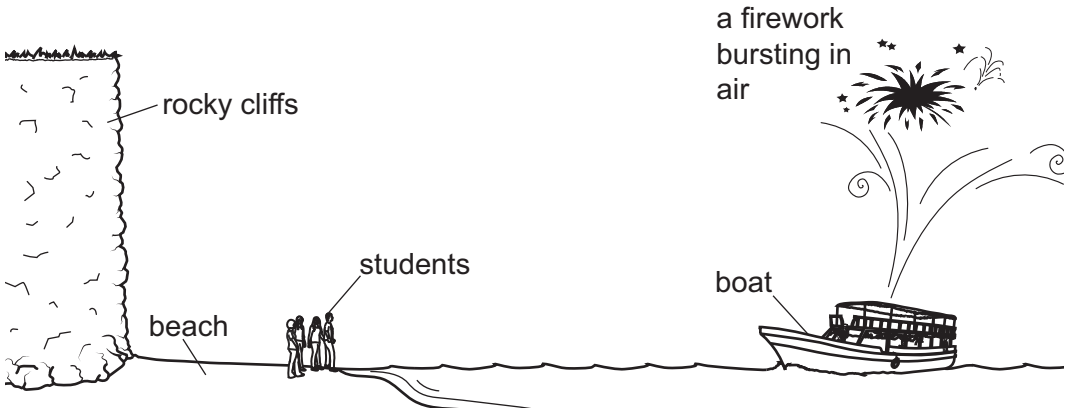

Fig. 6.1 (not to scale)

(a) The students hear a loud sound from the firework and then they hear a quieter, similar sound.

State what causes the second quieter, similar sound.

View solution

..... [1]

(b) The time from when the students see the firework burst to when they hear the first, loud sound is 1.3 s.

Calculate the distance from the firework to the students.

View solution

Use the speed of sound in air = 340 m / s.

distance to firework = ... m [3]

[Total: 4]

7 **(a)** A student demonstrates three different processes that change the direction of water waves in a ripple tank.
Fig. 7.1, Fig. 7.2 and Fig. 7.3 illustrate the three processes.

View solution

(i)

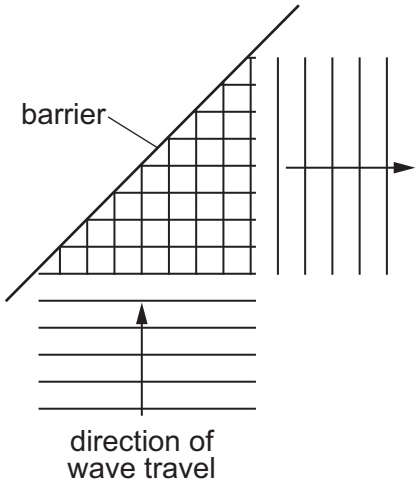

Fig. 7.1

State the name of the process shown in Fig. 7.1.

..... [1]

(ii)

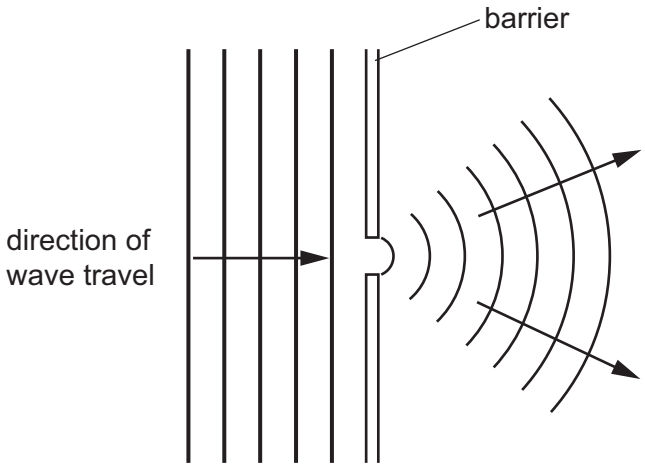

Fig. 7.2

State the name of the process shown in Fig. 7.2.

..... [1]

© UCLES 2024

(iii)

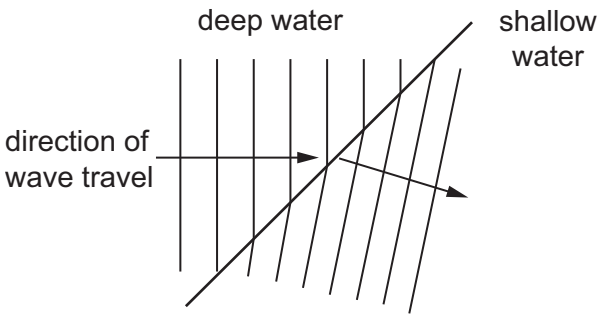

Fig. 7.3

State the name of the process shown in Fig. 7.3.

..... [1]

(iv) Give a reason why the waves in Fig. 7.3 change direction as they move from deep water to shallow water.

..... [1]

(b) Describe the direction of vibration of particles in a transverse wave.

View solution

.....

..... [2]

(c) Fig. 7.4 lists examples of waves. **Two** of the examples are transverse waves.

View solution

- ☐ radio waves
- ☐ seismic P-waves
- ☐ light waves
- ☐ sound waves

Fig. 7.4

Indicate which of the examples are transverse waves.
Put a tick (✓) in the box next to each example of a transverse wave. [2]

(d) The velocity of a wave is 1500 m / s. The frequency of the wave is 250 Hz.

View solution

Calculate the wavelength of the wave.

wavelength = ... m [3]

[Total: 11]

© UCLES 2024

8 **(a)** Fig. 8.1 shows a ray diagram for a thin converging lens.
The lens forms an image of the object. The object is positioned 30 cm from the centre of the lens.

View solution

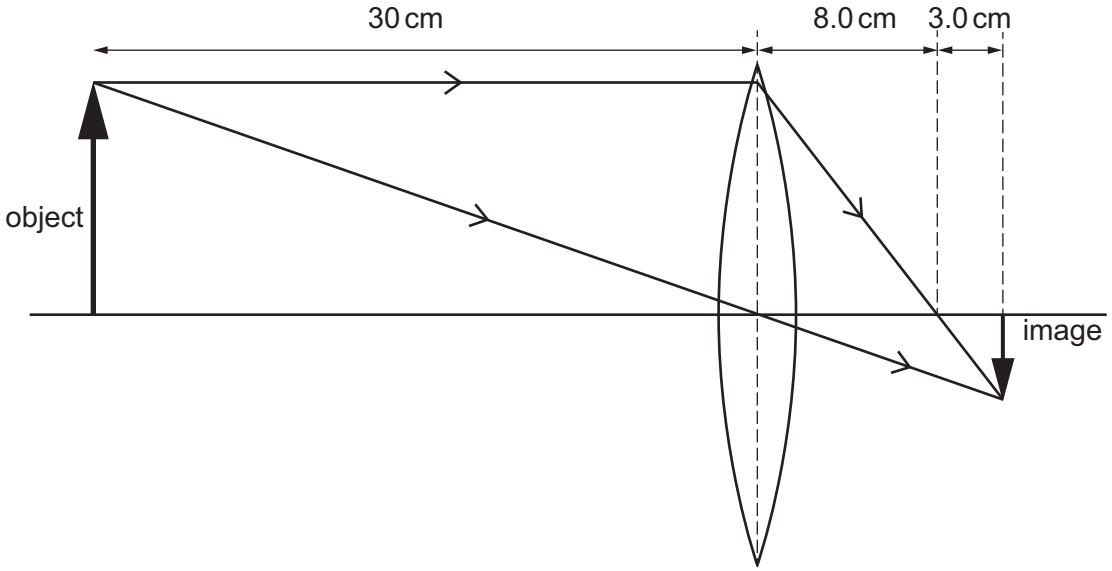

Fig. 8.1 (not to scale)

(i) Determine the distance of the image from the centre of the lens. Use information from Fig. 8.1.

image distance = ... m [1]

(ii) Determine the focal length of the lens. Use information from Fig. 8.1.

focal length = ... m [1]

(iii) State **two** characteristics of the image formed by the lens in Fig. 8.1.

1 .....

2 .....
[2]

(b) Fig. 8.2 shows labels for part of the electromagnetic spectrum in order of decreasing wavelength.

visible light	ultraviolet	.....	.....

decreasing wavelength

Fig. 8.2

View solution

(i) Complete Fig. 8.2 by writing the name of one type of radiation in each box. [2]

(ii) State **one** use of ultraviolet radiation.

..... [1]

(iii) State **one** danger to people from excessive exposure to ultraviolet radiation.

..... [1]

[Total: 8]

© UCLES 2024

9 A student tests various materials to determine whether they are electrical conductors or insulators. The student uses the circuit shown in Fig. 9.1.

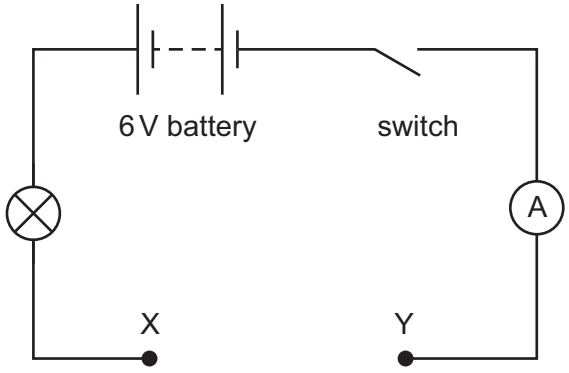

Fig. 9.1

View solution

(a) The student connects a piece of tin metal between X and Y.

Describe how the student can determine whether tin is an electrical conductor.

.....

.....

..... [2]

View solution

(b) Describe electrical conduction in a metal.

Use your ideas about electrons in your answer.

.....

.....

.....

..... [3]

[Total: 5]

10 In an experiment, a student uses an electrical heater connected to a power supply.

(a) The current in the electrical heater is 2.2 A. The voltage (p.d.) across the heater is 12 V.

View solution

Calculate the energy transferred to the heater in 90 s.

energy transferred = ... J [3]

(b) The power supply is connected to the electrical mains by a cable that consists of three wires.

State the name for each of the three wires in the cable.

View solution

1 ..... 2 ..... 3 .....

[2]

(c) The power supply includes a transformer.

The voltage (V_p) across the primary coil of the transformer is 228 V. The voltage (V_s) across the secondary coil of the transformer is 12 V. The number of turns on the primary coil (N_p) is 760.

Calculate the number of turns (N_s) on the secondary coil.

View solution

number of turns on secondary coil = ... [3]

[Total: 8]

© UCLES 2024

11 Fig. 11.1 represents the planets in the Solar System.

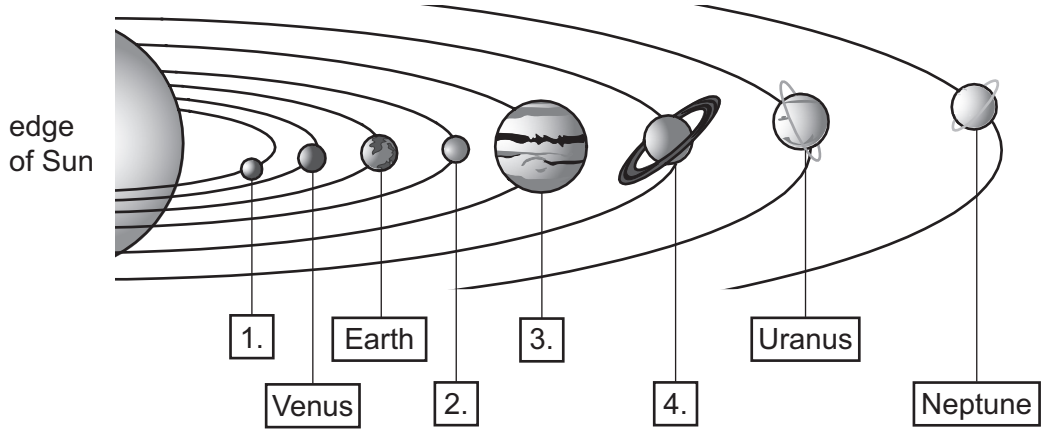

Fig. 11.1 (not to scale)

View solution

(a) In Fig. 11.1, there are four labels without the name of the planet.

For each label, state the name of the planet.

1. ..... 2. .....

3. ..... 4. .....

[2]

(b) Describe how the planets in the Solar System were formed.
Use your ideas about the accretion model. You may draw a diagram as part of your answer.

View solution

.....

.....

.....

.....

.....

..... [4]

[Total: 6]

Permission to reproduce items where third-party owned material protected by copyright is included has been sought and cleared where possible. Every reasonable effort has been made by the publisher (UCLES) to trace copyright holders, but if any items requiring clearance have unwittingly been included, the publisher will be pleased to make amends at the earliest possible opportunity.

To avoid the issue of disclosure of answer-related information to candidates, all copyright acknowledgements are reproduced online in the Cambridge Assessment International Education Copyright Acknowledgements Booklet. This is produced for each series of examinations and is freely available to download at www.cambridgeinternational.org after the live examination series.

Cambridge Assessment International Education is part of Cambridge Assessment. Cambridge Assessment is the brand name of the University of Cambridge Local Examinations Syndicate (UCLES), which is a department of the University of Cambridge.

© UCLES 2024