Cambridge Assessment International Education

Cambridge IGCSE™

CANDIDATE NAME									
CENTRE NUMBER						CANDIDATE NUMBER				

PHYSICS **0625/33**

Paper 3 Theory (Core) **October/November 2024**

1 hour 15 minutes

You must answer on the question paper.

No additional materials are needed.

INSTRUCTIONS

- Answer **all** questions.
- Use a black or dark blue pen. You may use an HB pencil for any diagrams or graphs.
- Write your name, centre number and candidate number in the boxes at the top of the page.
- Write your answer to each question in the space provided.
- Do **not** use an erasable pen or correction fluid.
- Do **not** write on any bar codes.
- You may use a calculator.
- You should show all your working and use appropriate units.
- Take the weight of 1.0 kg to be 9.8 N (acceleration of free fall = 9.8 m / s^2).

INFORMATION

- The total mark for this paper is 80.
- The number of marks for each question or part question is shown in brackets [ ].

This document has **16** pages. Any blank pages are indicated.

© UCLES 2024

1 **(a)** Fig. 1.1 shows the speed–time graph for a cyclist at the beginning of a race.

View solution

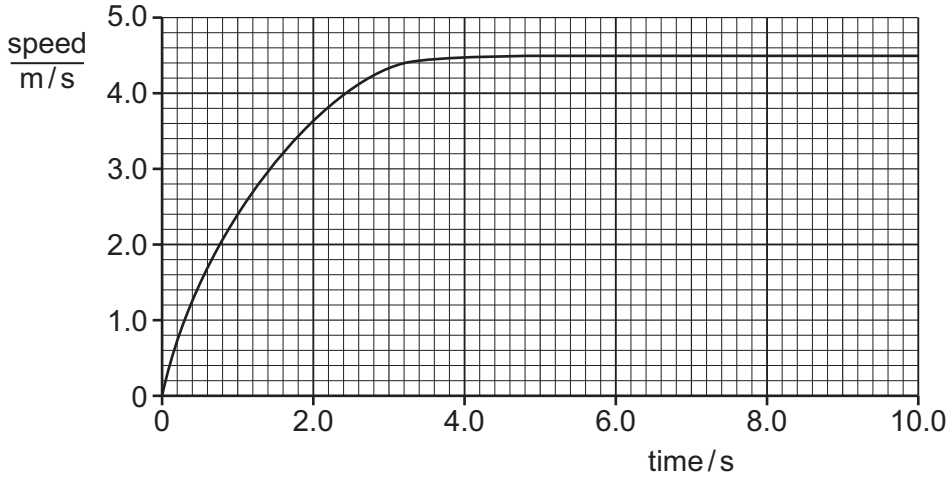

Fig. 1.1

(i) Describe the motion of the cyclist from time = 6.0 s to time = 10.0 s.

..... [1]

(ii) Determine the distance moved by the cyclist from time = 6.0 s to time = 10.0 s.

View solution

distance = ... m [3]

(b) Another cyclist travels 1000 m in 1 minute and 29 seconds.

View solution

(i) Determine how many seconds there are in 1 minute and 29 seconds.

number of seconds = ... s [1]

(ii) Calculate the average speed of this cyclist.

View solution

average speed = ... m / s [3]

© UCLES 2024

(c) The horizontal forces acting on a cyclist vary.
Fig. 1.2 shows the horizontal forces at one moment during a race.

View solution

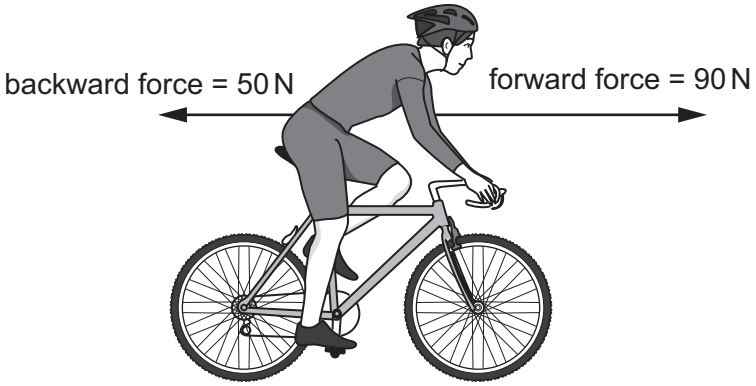

Fig. 1.2 (not to scale)

(i) Calculate the resultant horizontal force acting on the cyclist.

resultant horizontal force = ... N

direction = ...
[2]

(ii) Describe the effect of the resultant horizontal force in **(c)(i)** on the motion of the cyclist.

..... [1]

[Total: 11]

View solution

2 A teacher uses a spring in a demonstration.

The spring is shown in Fig. 2.1.

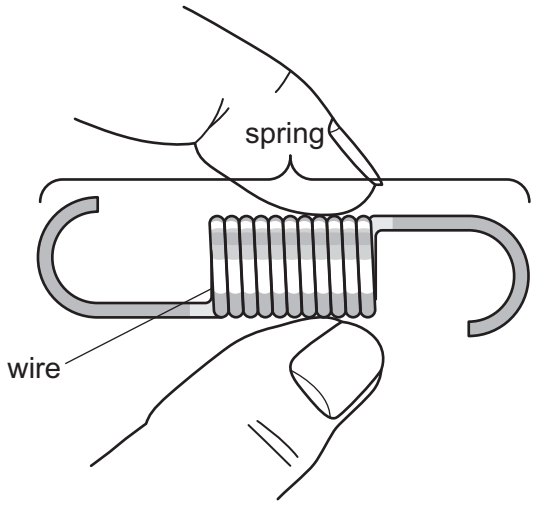

Fig. 2.1

View solution

(a) The spring is made from wire.
Describe how to determine the diameter of the **wire** accurately.
You may include a diagram as part of your answer.

.....

.....

.....

..... [3]

(b) A student adds loads to the spring. She measures the extension for each load. Fig. 2.2 shows the graph of extension against load for the spring.

View solution

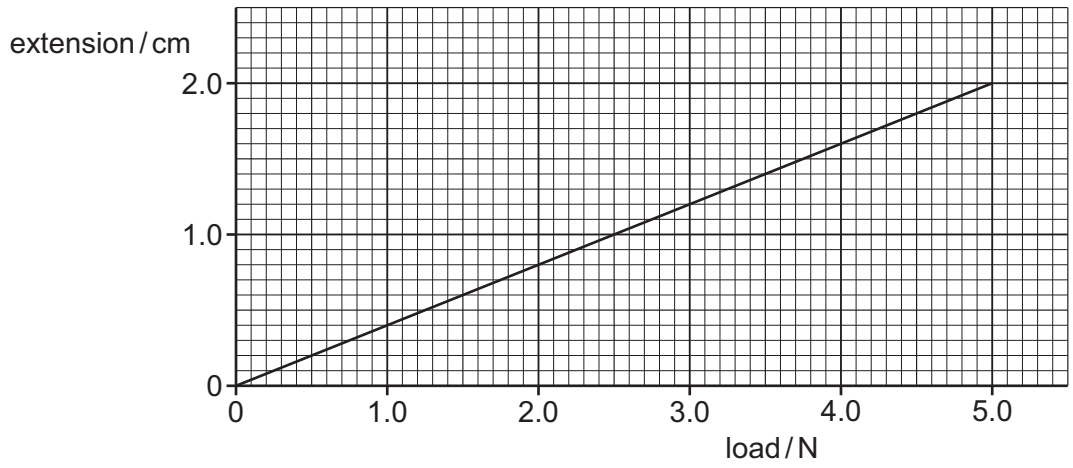

Fig. 2.2

(i) Using Fig. 2.2, determine the extension of the spring with a load of 4.0 N.

extension = ... cm [2]

(ii) The length of the spring without a load is 8.0 cm.
Calculate the length of the spring with a load of 4.0 N.

View solution

length = ... cm [1]

[Total: 6]

© UCLES 2024

3 **(a)** A boy weighs 620 N.
Calculate the mass of the boy.

View solution

mass of boy = ... kg [3]

(b) Fig. 3.1 shows another boy sitting on a solid block of wood.

View solution

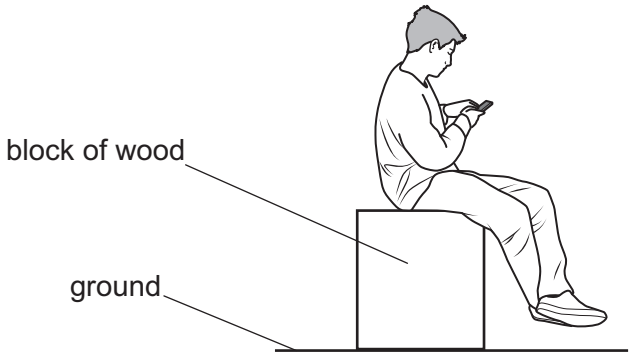

Fig. 3.1

The total weight of the boy and the block is 1200 N.
The area of the block of wood in contact with the ground is 0.16 m^2.

Calculate the pressure exerted on the ground.

pressure = ... N/m^2 [3]

[Total: 6]

© UCLES 2024

4 **(a)** State the principle of conservation of energy.

.....

..... [1]

(b) Fig. 4.1 shows a stop-watch that is powered by a battery. The stop-watch measures a time period in minutes and seconds.

View solution

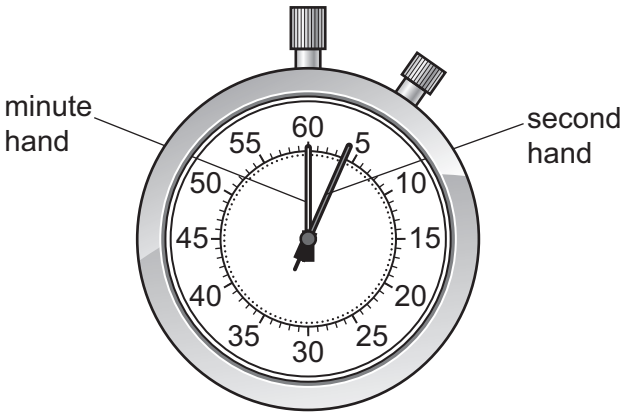

Fig. 4.1

Complete the sentences about energy transfers in the stop-watch that is measuring a time period.

(i) The type of energy stored in the battery is ..... energy. [1]

(ii) The type of energy stored in the stop-watch's second hand is ..... energy. [1]

(iii) The stop-watch has a bell.
When the bell rings, energy is transferred to the surroundings as ..... energy. [1]

[Total: 4]

© UCLES 2024

5 **(a)** Table 5.1 defines three specific temperatures.

View solution

(i) Complete Table 5.1 by writing the correct temperature for each definition.

Table 5.1

definition	temperature / °C
pure water boiling at standard atmospheric pressure	
pure ice melting at standard atmospheric pressure	
the lowest possible temperature of matter	

[3]

View solution

(ii) The temperature of air in a room is 15 °C.
Calculate the temperature of the air in kelvin.

temperature = ...K [2]

View solution

(b) A teacher demonstrates thermal energy transfer through some metal rods. Fig. 5.1 shows the arrangement.

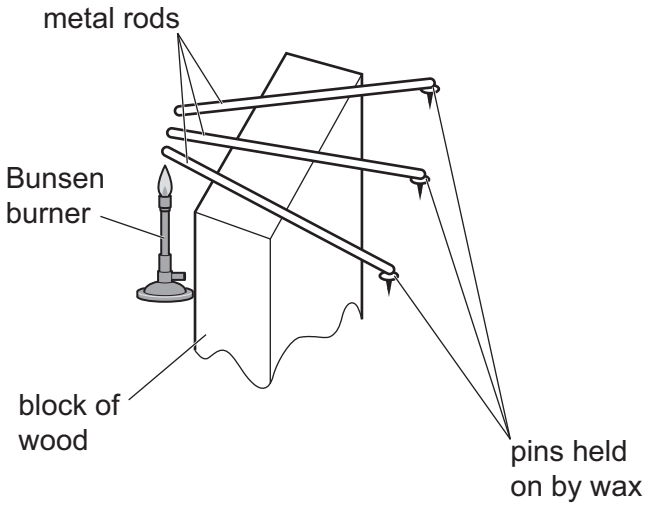

Fig. 5.1

The metal rods are placed on a block of wood.
The demonstration compares how quickly thermal energy is transferred to the wax at the end of each rod.

(i) State the name of the process for thermal energy transfer through the metal rods.

..... [1]

© UCLES 2024

(ii) The rods are made from different metals. The rods have the same length and diameter. The ends of the rods in the Bunsen flame are at the same temperature.

State how the demonstration shows which metal transfers thermal energy at the greatest rate.

.....

..... [2]

(c) A playground includes a concrete area with white and black squares, as shown in Fig. 5.2.

View solution

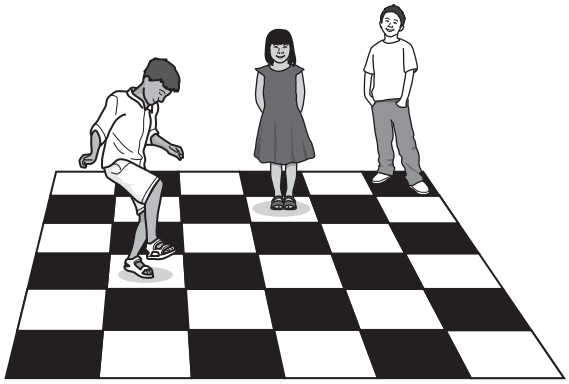

Fig. 5.2

The Sun shines on the concrete area during the day. The temperature of the concrete area increases. During the afternoon, students compare the temperature of the white squares with the temperature of the black squares.

State and explain whether the white squares or the black squares have the higher temperature. Include the name of the process of thermal energy transfer from the Sun to the squares.

.....

.....

..... [2]

[Total: 10]

6 A teacher uses a ripple tank to demonstrate the properties of waves.

(a) When a wave travels on the surface of the water in the ripple tank, the water particles vibrate at right angles to the direction of travel of the wave.
State the term for a wave in which particles vibrate at right angles to the direction of travel.

..... [1]

(b) The teacher demonstrates waves moving from deep water into shallow water.
Fig. 6.1 shows the crests of the waves, viewed from above. The arrows show the direction of wave travel.

View solution

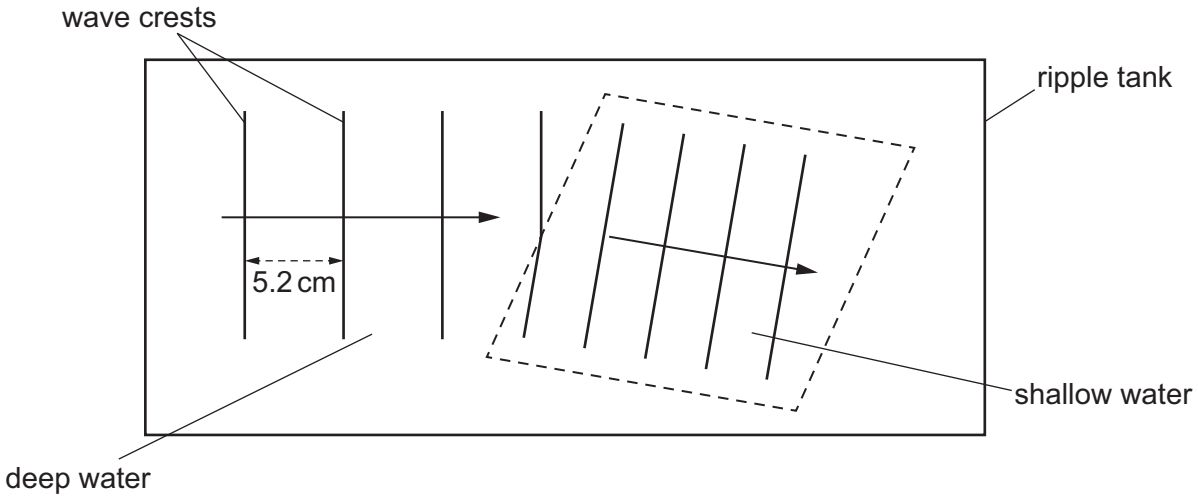

Fig. 6.1

(i) Complete the sentence about the wave property shown in Fig. 6.1.

The change of direction of the wave is called ..... . [1]

(ii) Fig. 6.1 shows that the direction of the wave changes as the wave enters the shallow water.
State why the wave changes direction.

View solution

..... [1]

(iii) The speed of the wave in the deep water is 35 cm / s.
Determine the frequency of the wave. Use the information in Fig. 6.1.

View solution

frequency = ...Hz [3]

[Total: 6]

7 **(a)** Table 7.1 lists three uses of electromagnetic (e.m.) waves.
Complete Table 7.1 by adding a suitable type of electromagnetic wave for each use.

View solution

Table 7.1

use	type of e.m. wave
electric grills	
to treat cancer	
to detect fake bank notes	

[3]

(b) The arrows on Fig. 7.1 show the path of satellite television (TV) signals travelling from a transmitter to a receiver.

View solution

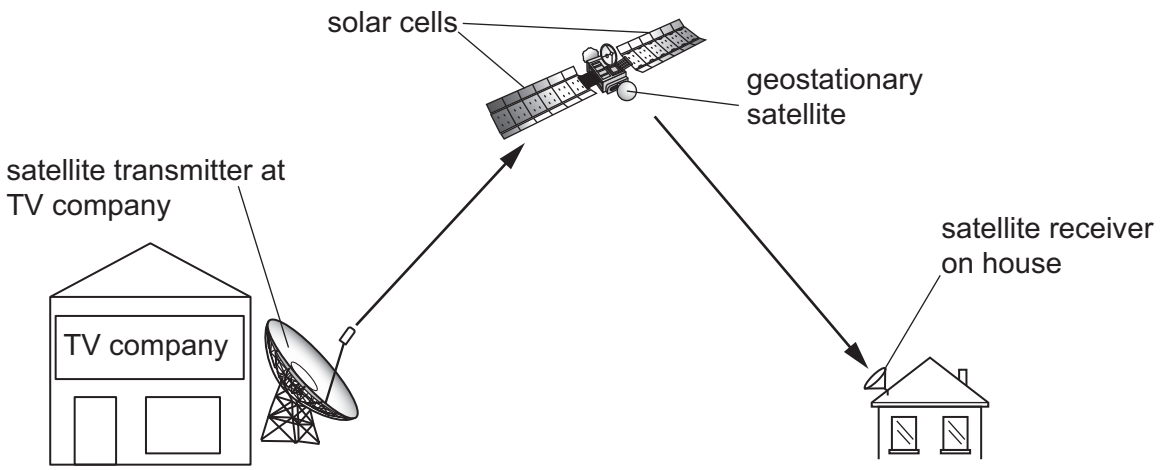

Fig. 7.1 (not to scale)

(i) State the type of electromagnetic (e.m.) wave used for the satellite television signal.

..... [1]

(ii) The geostationary satellite is in orbit.
Describe the orbit of a geostationary satellite used for satellite television signals.

.....

.....

..... [2]

(iii) State the source of the energy that powers the solar cells.

..... [1]

(iv) State how energy is transferred from the solar cells for use by the satellite.

..... [1]

[Total: 8]

© UCLES 2024

8 **(a)** A student connects a circuit with two lamps and three switches, S_1, S_2 and S_3, as shown in Fig. 8.1.

View solution

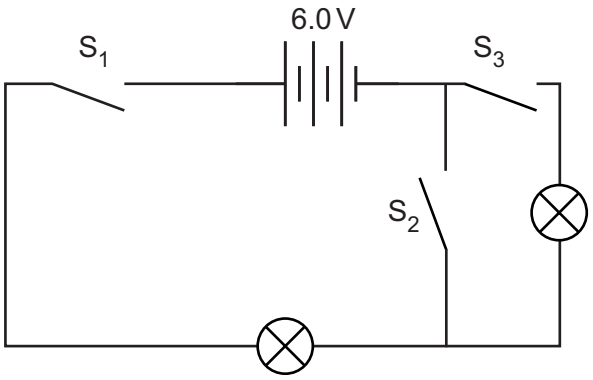

Fig. 8.1

(i) The student switches on **one** lamp.
State which switches the student closes to switch on only **one** lamp.

..... [1]

(ii) The student opens all the switches then switches on **two** lamps.
State which switches the student closes to switch on **two** lamps.

View solution

..... [1]

(b) Fig. 8.2 shows the manufacturer's information for one of the lamps.

View solution

voltage = 6.0 V
current = 0.53 A

Fig. 8.2

Calculate the resistance of the lamp when it is connected to a 6.0 V power source.

resistance = ... Ω [3]

(c) Calculate the electrical power transferred in the lamp when it is connected to a 6.0 V power source.
Include the unit.

View solution

power transferred = ... unit ..... [4]

[Total: 9]

© UCLES 2024

9 **(a)** Fig. 9.1 shows a magnet spinning steadily near to a coil. There is a reading on the voltmeter.

View solution

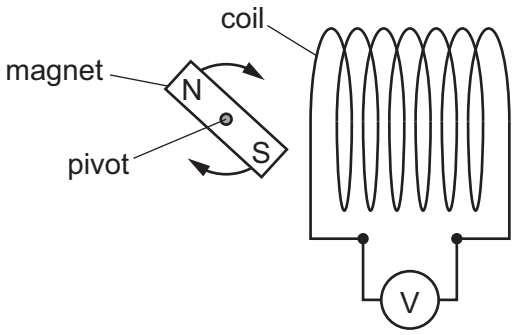

Fig. 9.1

Explain why there is a reading on the voltmeter.

.....

.....

..... [2]

(b) A step-down transformer reduces the mains voltage of 220 V a.c. to 12 V a.c.
The transformer has 5000 turns on the primary coil.

View solution

Calculate the number of turns on the secondary coil.

number of turns = ... [3]

[Total: 5]

© UCLES 2024

10 (a) (i) State how a neutral atom becomes a positive ion.

..... [1]

(ii) State the type of nuclear emission which is the most ionising. View solution

..... [1]

(b) Isotopes of copper (Cu) include: Cu - 63 and Cu - 65.
Explain what is meant by 'isotopes of copper'. View solution

.....

..... [2]

(c) A teacher provides the data in Table 10.1 about the decay of a radioactive sample. View solution

Table 10.1

time / s	count rate / counts/s
0	300
22	200
44	150
66	100
88	75

Use the information in Table 10.1 to determine the half-life of the radioactive sample.

half-life = ... s [2]

(d) Describe how to store radioactive materials safely. View solution

.....

..... [1]

[Total: 7]

11 **(a)** Fig. 11.1 shows the Moon orbiting the Earth.

View solution

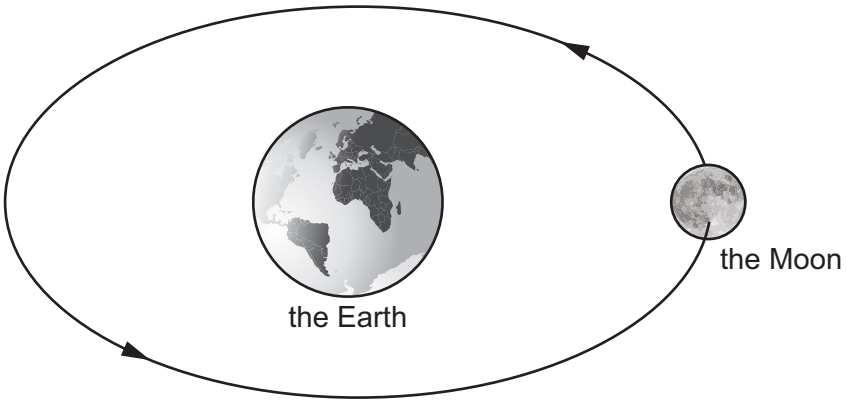

Fig. 11.1

(i) State the name of the force that keeps the Moon in orbit around the Earth.

..... [1]

(ii) State the time taken by the Moon to complete **one** orbit of the Earth. Include the unit.

time for **one** orbit = ... unit ..... [1]

(iii) A device on the Moon sends a radio signal to the Earth.
The distance from the Moon to the Earth is 3.8×10^8 m.
The speed of a radio wave is 3.0×10^8 m/s.

Calculate the time the radio signal takes to travel from the Moon to the Earth.

time = ... s [3]

(b) An astronomer observes light from a distant galaxy.

View solution

She writes this conclusion:

'*The observed wavelength of light from the distant galaxy is longer than the wavelength of the light emitted by the galaxy.*'

Explain how this conclusion supports the Big Bang Theory of the Universe.

.....

.....

.....

.....

.....

..... [3]

[Total: 8]

© UCLES 2024

BLANK PAGE

Permission to reproduce items where third-party owned material protected by copyright is included has been sought and cleared where possible. Every reasonable effort has been made by the publisher (UCLES) to trace copyright holders, but if any items requiring clearance have unwittingly been included, the publisher will be pleased to make amends at the earliest possible opportunity.

To avoid the issue of disclosure of answer-related information to candidates, all copyright acknowledgements are reproduced online in the Cambridge Assessment International Education Copyright Acknowledgements Booklet. This is produced for each series of examinations and is freely available to download at www.cambridgeinternational.org after the live examination series.

Cambridge Assessment International Education is part of Cambridge Assessment. Cambridge Assessment is the brand name of the University of Cambridge Local Examinations Syndicate (UCLES), which is a department of the University of Cambridge.

© UCLES 2024