Cambridge Assessment International Education

Cambridge IGCSE™

CANDIDATE NAME									
CENTRE NUMBER						CANDIDATE NUMBER				

PHYSICS **0625/41**

Paper 4 Theory (Extended) **October/November 2024**

1 hour 15 minutes

You must answer on the question paper.

No additional materials are needed.

INSTRUCTIONS

- Answer **all** questions.
- Use a black or dark blue pen. You may use an HB pencil for any diagrams or graphs.
- Write your name, centre number and candidate number in the boxes at the top of the page.
- Write your answer to each question in the space provided.
- Do **not** use an erasable pen or correction fluid.
- Do **not** write on any bar codes.
- You may use a calculator.
- You should show all your working and use appropriate units.
- Take the weight of 1.0 kg to be 9.8 N (acceleration of free fall = 9.8 m / s^2).

INFORMATION

- The total mark for this paper is 80.
- The number of marks for each question or part question is shown in brackets [ ].

This document has **20** pages. Any blank pages are indicated.

© UCLES 2024

1 A spring is suspended from a clamp. Fig. 1.1 shows a pointer attached to the lower end of the spring.

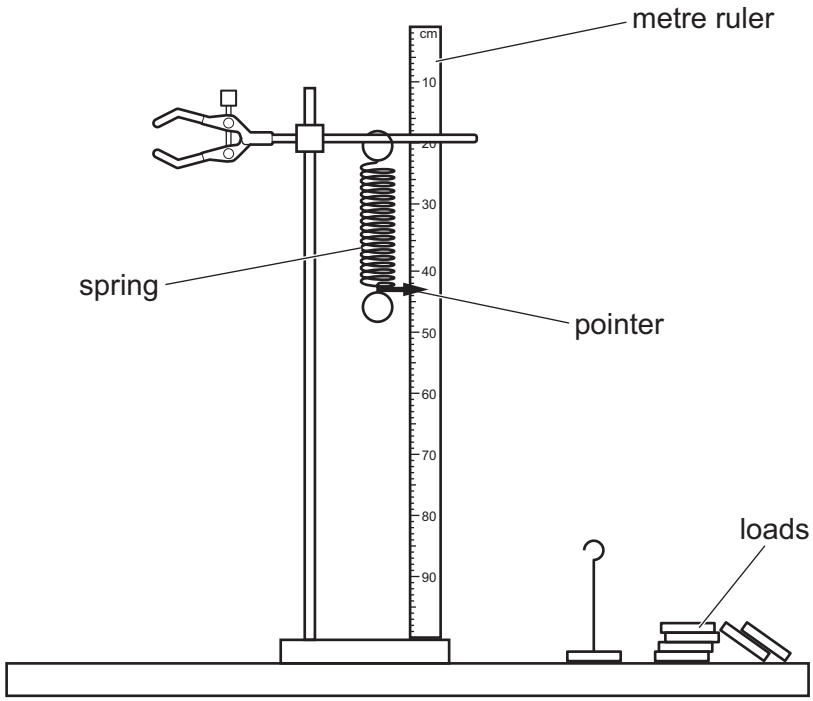

Fig. 1.1

A student suspends loads of different weights from the spring and records the readings on the metre ruler.

© UCLES 2024

Fig. 1.2 is the reading–weight graph that the student obtains.

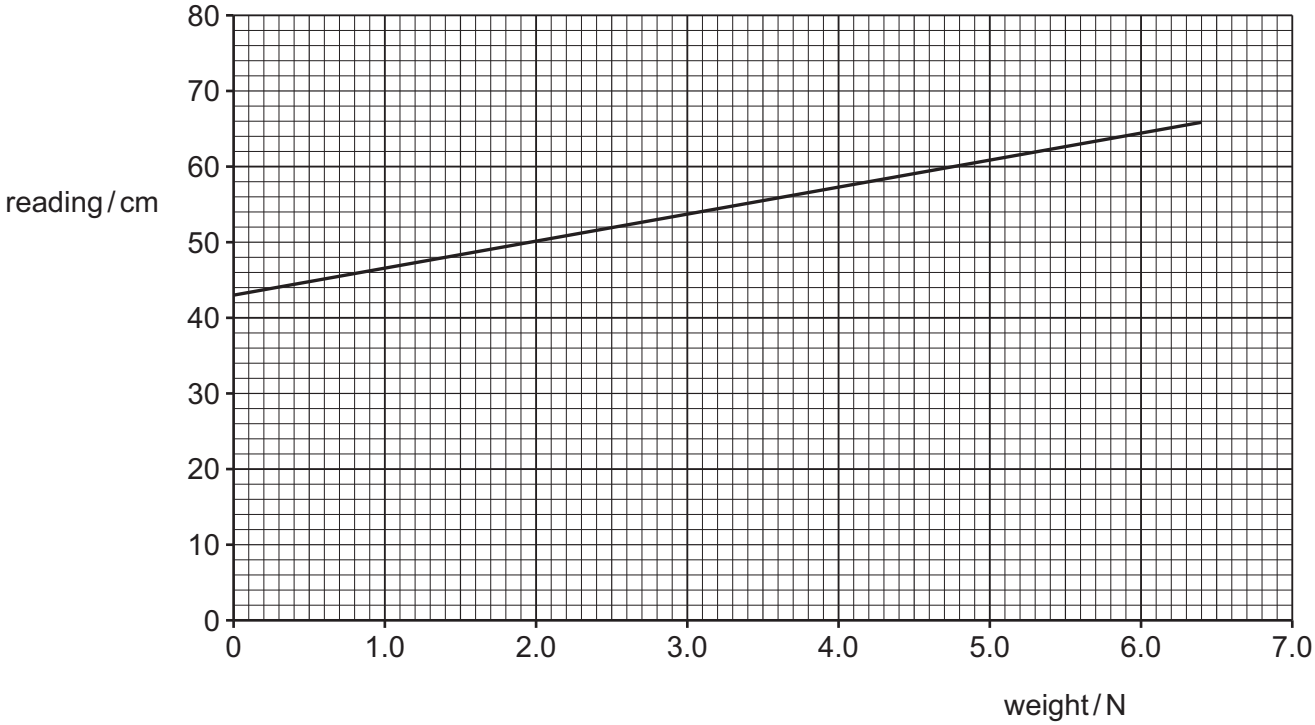

Fig. 1.2

(a) **(i)** Using Fig. 1.2, determine the reading on the metre ruler when

View solution

1. no weight is attached to the spring .....

2. a weight of 5.6 N is attached to the spring .....

[1]

(ii) Calculate the **extension** of the spring when the weight attached is 5.6 N.

View solution

extension = ... [1]

(b) Using the values found in **(a)**, calculate the spring constant of the spring.

View solution

spring constant = ... [2]

© UCLES 2024

(c) An object of mass 0.50 kg is attached to the spring.

View solution

(i) Calculate the weight of the object.

weight = ... [1]

View solution

(ii) The object is pulled downwards until the tension in the spring is 6.5 N.

The object is released.

Calculate the acceleration of the object immediately after it is released.

acceleration = ... [3]

[Total: 8]

© UCLES 2024

BLANK PAGE

2 A drag car is a racing car that is powered by a rocket engine.

A drag car accelerates uniformly from rest until it reaches the finishing line. The engine is then switched off and a parachute opens. The car decelerates until it stops.

Fig. 2.1 shows a drag car decelerating after a race.

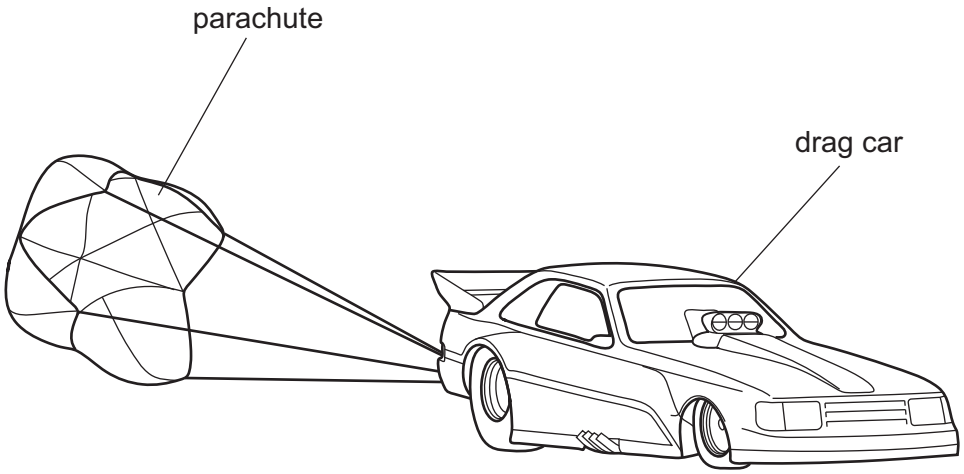

Fig. 2.1

This drag car has a mass of 1400 kg.

Fig. 2.2 is the speed–time graph for the car during a race on a straight horizontal track.

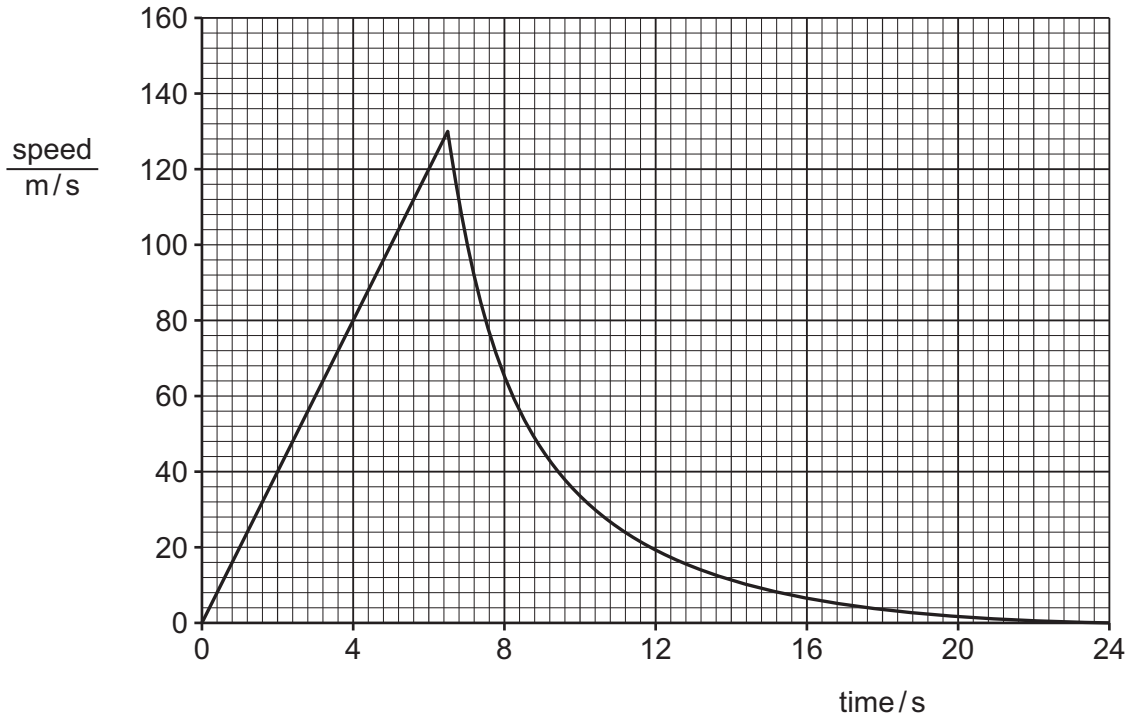

Fig. 2.2

The car reaches its maximum speed of 130 m / s at a time of 6.5 s.

(a) **(i)** Calculate the maximum momentum of the car during the race.

View solution

maximum momentum = ... [2]

(ii) State the feature of Fig. 2.2 that represents the distance travelled by the car.

View solution

.....

..... [1]

(iii) Determine the distance travelled by the car in the first 6.5 s.

View solution

distance = ... [2]

(b) The parachute opens at 6.5 s and the car decelerates.

View solution

Describe how Fig. 2.2 shows that, after 6.5 s:

(i) the car decelerates

.....

..... [1]

(ii) the deceleration of the car is **not** constant.

View solution

.....

..... [1]

(c) Describe the energy transfer that takes place as the car slows down.

View solution

.....

..... [2]

[Total: 9]

© UCLES 2024

3 **(a)** Define the moment of a force and describe the effect that it measures.

.....

.....

.....

..... [3]

(b) A large rectangular block of stone has a square base of side 3.4 m. Fig. 3.1 shows the block at rest on a horizontal surface.

View solution

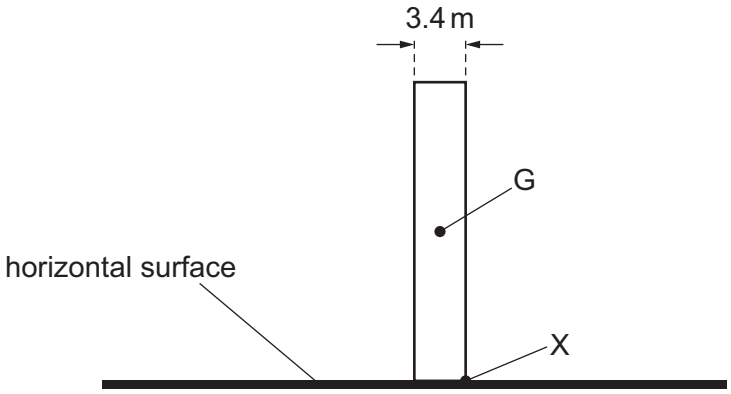

Fig. 3.1

The block is of uniform density and the centre of gravity G is at its centre.

(i) Explain what is meant by centre of gravity.

.....

..... [1]

(ii) The weight of the block is 1.3×10^7 N.

View solution

Calculate the moment of the weight of the block about corner X.

moment of weight = ... [2]

(c) The block shown in Fig. 3.1 is in equilibrium.

View solution

State the **two** different conditions that apply when an object is in equilibrium.

1 .....

2 .....

[2]

[Total: 8]

4 **(a)** Describe an experiment to determine the specific heat capacity of aluminium. You may draw a diagram.

View solution

Include in your answer:

- the measurements made
- any equations needed.

.....

.....

.....

..... [4]

(b) An aluminium dish is initially at room temperature. Boiling water is poured into the aluminium dish as shown in Fig. 4.1.

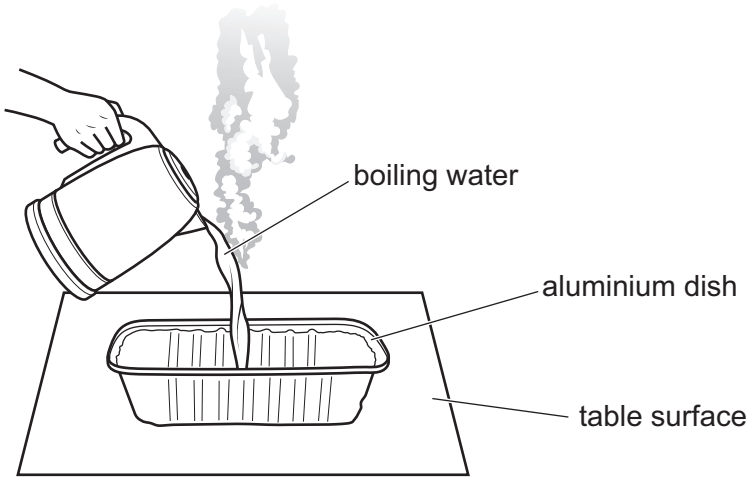

Fig. 4.1

(i) Explain why, after a short time, the dish and the water are the same temperature.

.....

.....

.....

..... [3]

(ii) Explain, in terms of its particles, why the aluminium expands as the boiling water is poured into the dish.

.....

.....

..... [2]

(iii) The water in the dish evaporates.

View solution

Explain, in terms of the water molecules, what is meant by evaporation.

.....

.....

..... [2]

[Total: 11]

5 A loudspeaker produces a sound wave in air. The distance between the centre of a compression and the centre of a neighbouring rarefaction is 0.10 m.

View solution

(a) Calculate the wavelength of the sound wave.

wavelength = ... [1]

View solution

(b) State a typical value for the speed of sound in air.

..... [1]

View solution

(c) **(i)** Calculate the frequency of the sound from the loudspeaker.

frequency = ... [2]

(ii) Explain whether the sound from the loudspeaker is audible to a human with normal hearing.

.....

..... [1]

View solution

(d) Another loudspeaker produces a sound of wavelength 0.40 m. Sound from the loudspeaker reaches a sound absorbing surface with a gap of width 0.80 m at the centre.

View solution

Fig. 5.1 shows the arrangement.

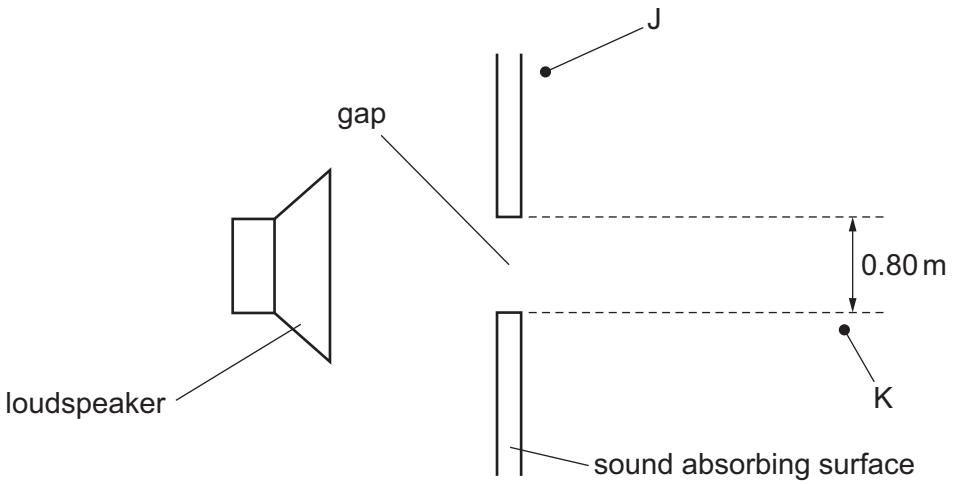

Fig. 5.1

Explain whether it is possible to detect sound from the loudspeaker at either point J or at point K.

point J .....

.....

.....

point K .....

.....

.....

[4]

[Total: 9]

6 A potential divider is made by connecting a light-dependent resistor (LDR) and a thermistor in series. Fig. 6.1 shows the potential divider, a voltmeter and a direct current (d.c.) power supply connected into a circuit.

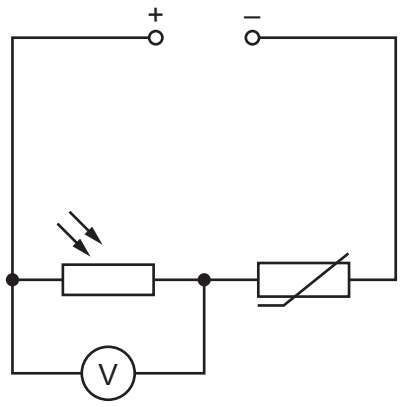

Fig. 6.1

The voltmeter measures the potential difference (p.d.) across the LDR.

View solution

(a) Define potential difference (p.d.).

.....

.....

..... [2]

(b) The electromotive force (e.m.f.) of the supply is *E*.

Describe how the p.d. across the thermistor can be determined using the reading on the voltmeter.

.....

..... [1]

View solution

(c) The resistance of the LDR decreases and the resistance of the thermistor increases.

(i) State what has happened to the light intensity incident on the LDR and the temperature of the thermistor.

intensity of incident light on LDR: .....

temperature of thermistor: .....

[1]

(ii) Explain what happens to the reading on the voltmeter.

View solution

.....

.....

.....

..... [3]

[Total: 7]

© UCLES 2024

7 A solid bar is inside a copper solenoid. Fig. 7.1 shows that the copper solenoid is connected in series with a battery and a variable resistor.

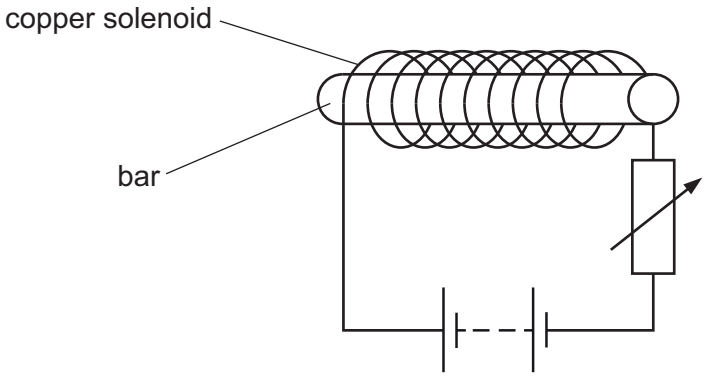

Fig. 7.1

The device shown in Fig. 7.1 is an electromagnet.

(a) Suggest a suitable material for the bar.

View solution

..... [1]

(b) The right-hand end of the bar is the S pole.

View solution

(i) Fig. 7.2 shows the bar viewed from above.

On Fig. 7.2, draw at least six field lines to show the pattern and direction of the magnetic field surrounding the bar.



Fig. 7.2

[3]

(ii) The resistance of the variable resistor increases.

Explain what happens to the magnetic field surrounding the bar and state how the pattern of field lines that represents the field changes.

.....

.....

.....

..... [3]

(c) A square coil of many turns is placed close to the bar. Fig. 7.3 shows the plane of the square coil parallel to the flat circular surface at the right-hand end of the bar.

View solution

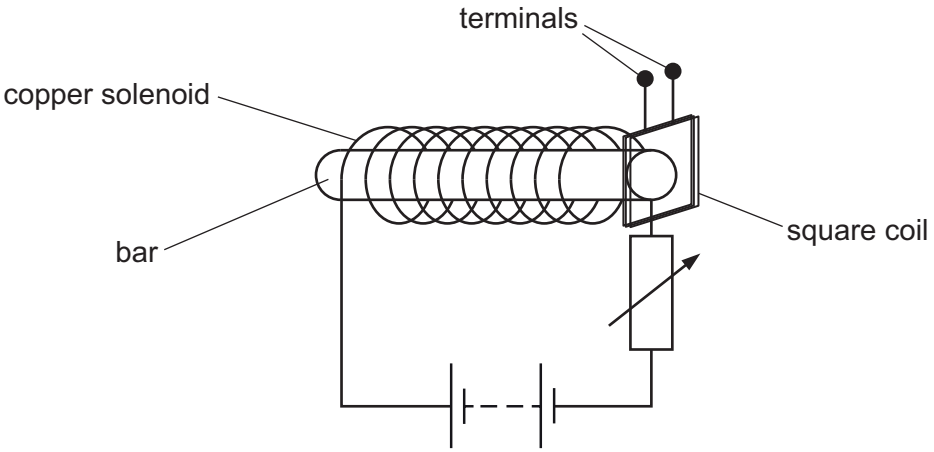

Fig. 7.3

The resistance of the variable resistor is alternately increased and decreased.

Explain what happens in the wires of the square coil.

.....

.....

.....

..... [3]

[Total: 10]

8 The nuclide notation for the radioactive isotope carbon-14 is $^{14}_{6}C$.

(a) Using the symbols shown in Fig. 8.1, draw a diagram to show the number of electrons, neutrons and protons in a neutral atom of carbon-14 and how they are arranged.

View solution

symbols:

electron ×

neutron o

proton ●

Fig. 8.1

[3]

(b) Describe how the composition of a neutral atom of carbon-14 is different from the composition of a neutral atom of nitrogen-14 ($^{14}_{7}N$).

.....

..... [2]

View solution

© UCLES 2024

(c) Carbon-14 decays by beta (β) emission.

View solution

(i) State the name of a particle that is identical to a beta-particle.

..... [1]

View solution

(ii) Describe the change that takes place in carbon-14 as a beta-particle is emitted.

.....

..... [1]

(d) The half-life of carbon-14 is 5700 years.

A very old object is made of wood. It contains 1.2×10^{11} atoms of carbon-14. When it was manufactured, it contained 9.6×10^{11} atoms of carbon-14.

View solution

Determine the time that has passed since it was manufactured.

time passed = ... [3]

[Total: 10]

9 The Milky Way is the galaxy in which the Solar System is located.

View solution

(a) State what a galaxy is.

.....

..... [1]

View solution

(b) The Milky Way has a diameter that is approximately equal to 100 000 light-years.

Determine this distance in kilometres (km).

distance = ... km [2]

(c) Astronomers determine the speed and distance from the Earth of a far galaxy that is moving away from the Earth.

(i) State **one** observation that allows the speed at which a galaxy is moving away to be determined.

.....

..... [1]

(ii) State **one** different observation that is used to determine the distance to a far galaxy.

.....

..... [1]

(iii) State how the speeds of galaxies and their distances from the Earth are related.

.....

..... [1]

View solution

(iv) The best estimate for the Hubble constant H_0 is 2.2×10^{-18} per second.

Use this value to calculate an estimate for the age of the Universe.

age of the Universe = ... s [2]

[Total: 8]

Permission to reproduce items where third-party owned material protected by copyright is included has been sought and cleared where possible. Every reasonable effort has been made by the publisher (UCLES) to trace copyright holders, but if any items requiring clearance have unwittingly been included, the publisher will be pleased to make amends at the earliest possible opportunity.

To avoid the issue of disclosure of answer-related information to candidates, all copyright acknowledgements are reproduced online in the Cambridge Assessment International Education Copyright Acknowledgements Booklet. This is produced for each series of examinations and is freely available to download at www.cambridgeinternational.org after the live examination series.

Cambridge Assessment International Education is part of Cambridge Assessment. Cambridge Assessment is the brand name of the University of Cambridge Local Examinations Syndicate (UCLES), which is a department of the University of Cambridge.

© UCLES 2024