Cambridge Assessment International Education

Cambridge IGCSE™

CANDIDATE NAME									
CENTRE NUMBER						CANDIDATE NUMBER				

PHYSICS **0625/42**

Paper 4 Theory (Extended) **October/November 2024**

1 hour 15 minutes

You must answer on the question paper.

No additional materials are needed.

INSTRUCTIONS

- Answer **all** questions.
- Use a black or dark blue pen. You may use an HB pencil for any diagrams or graphs.
- Write your name, centre number and candidate number in the boxes at the top of the page.
- Write your answer to each question in the space provided.
- Do **not** use an erasable pen or correction fluid.
- Do **not** write on any bar codes.
- You may use a calculator.
- You should show all your working and use appropriate units.
- Take the weight of 1.0 kg to be 9.8 N (acceleration of free fall = 9.8 m / s^2).

INFORMATION

- The total mark for this paper is 80.
- The number of marks for each question or part question is shown in brackets [ ].

This document has **16** pages. Any blank pages are indicated.

© UCLES 2024

1 **(a)** A rocket has an initial mass of 7.4×10^6 kg.

View solution

(i) Calculate the initial weight of the rocket.

weight = ... [1]

(ii) Define, in words, the term weight.

View solution

.....

..... [1]

(b) Fig. 1.1 shows part of the speed-time graph for the rocket as it leaves the ground and travels into space.

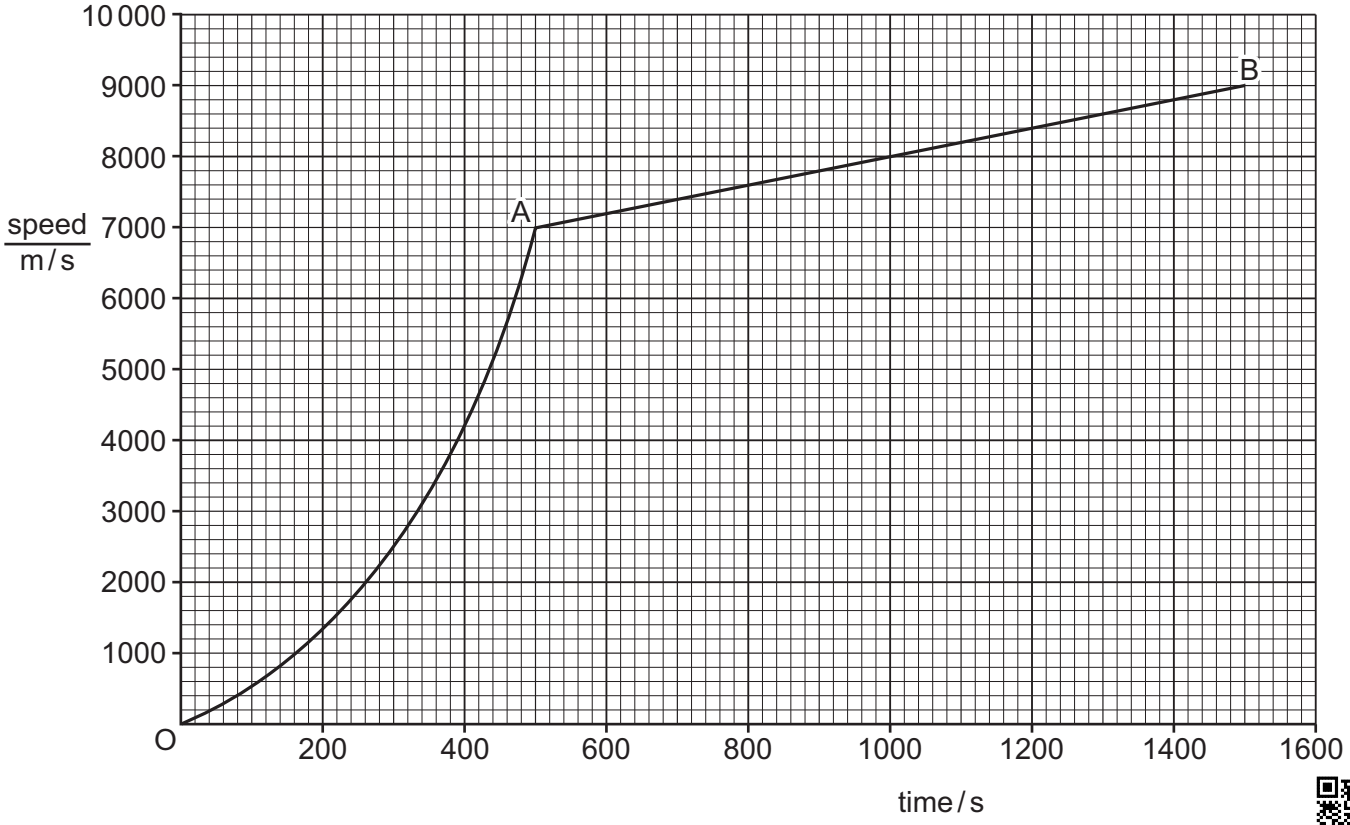

View solution

Fig. 1.1

(i) Describe the motion of the rocket:

From O to A .....

From A to B .....

[2]

© UCLES 2024

(ii) Draw a tangent to the graph at time = 400 s and use this to calculate the acceleration of the rocket at this time. Show your working.

View solution

acceleration = ... [2]

(c) Rockets are used to launch satellites into space. When the satellite is released, the rocket returns to the Earth.

Explain in terms of forces why the rocket reaches terminal velocity as it travels through the atmosphere back to the Earth.

.....

.....

..... [2]

[Total: 8]

View solution

2 Fig. 2.1 shows a golfer about to hit a golf ball with a golf club. The initial momentum of the golf ball is zero.



Fig. 2.1

(a) Define momentum.

View solution

..... [1]

(b) The golf club is in contact with the ball for 5.0×10^{-4} s. The velocity of the golf ball as it leaves the golf club is 41 m / s. The golf ball has a mass of 0.046 kg.

(i) Calculate the impulse on the golf ball.

View solution

impulse = ... [2]

(ii) Calculate the force applied to the ball by the golf club.

View solution

force = ... [2]

[Total: 5]

© UCLES 2024

3 **(a)** State **two** energy resources for which radiation from the Sun is the main source of energy.

1 .....

2 .....

[2]

(b) A wind turbine is used to generate electricity.
The useful output from the turbine in 1.0 s is 6000 J. The kinetic energy of the wind hitting the turbine in 1.0 s is 11 000 J. The velocity of the wind hitting the turbine is 6.3 m / s.

View solution

(i) Show that the mass of air hitting the turbine each second is approximately 550 kg.

[2]

(ii) Calculate the efficiency of the turbines. You may assume that all the kinetic energy stored in the wind is transferred to the turbine.

View solution

efficiency = ...% [2]

(c) Tidal energy and wind energy are both renewable energy resources.
Suggest **one** reason why tidal energy is a more useful energy resource than wind energy.

View solution

Ignore the costs of construction and maintenance.

.....

..... [1]

[Total: 7]

© UCLES 2024

4 Fig. 4.1 shows a pressure cooker on an electric heating element. The cooker has a tight-fitting lid.

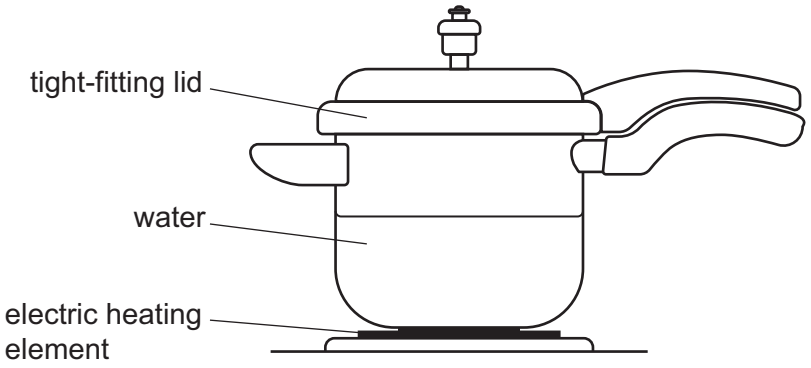

Fig. 4.1

(a) The pressure cooker is half-full of water. As the water is heated some water evaporates before the water boils.
Describe **two** differences between evaporation and boiling of the water in the cooker.

View solution

.....

.....

..... [2]

(b) As the water is heated, the pressure of the gas inside the cooker increases.
Explain this increase in pressure in terms of particles.

View solution

.....

.....

.....

.....

..... [4]

[Total: 6]

© UCLES 2024

5 On a sunny day, the temperatures of a black tarmac road and the air above the road increase.

View solution

(a) Explain why the surface temperature of the tarmac increases.

.....

.....

..... [2]

(b) State the method of thermal energy transfer from the tarmac to the air **immediately** above the road.

..... [1]

(c) State the main method of thermal energy transfer from the air immediately above the road to the rest of the air.

..... [1]

(d) Explain why the surface temperature of the tarmac is higher than the surrounding air temperature.

.....

.....

..... [2]

[Total: 6]

View solution

6 A student plays the violin near the doorway to a large room. Fig. 6.1 shows a young teacher standing where he can hear the sound but cannot see the student.

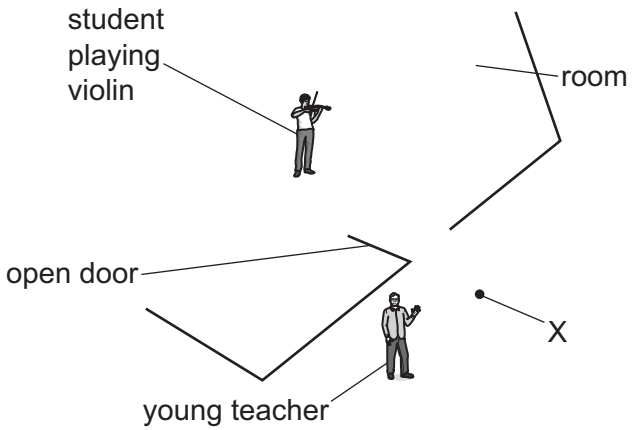

Fig. 6.1

(a) (i) State the wave effect that allows the young teacher to hear sounds from the violin at the position he is standing in Fig. 6.1.

..... [1]

(ii) Calculate the frequency of sound with a wavelength of 0.75 m.
The speed of sound in air is 340 m / s.

View solution

frequency = ... [2]

(iii) A violin produces sounds in the frequency range 200 Hz–3800 Hz. The width of the open doorway is 0.75 m.

Explain why the young teacher hears the frequency calculated in **(a)(ii)** clearly but finds a frequency of 3500 Hz much harder to hear.

.....

.....

..... [2]

(b) A plane mirror is placed at point X so that the teacher can see the student.
On Fig. 6.1:

View solution

- draw a light ray from the violin to point X and from point X to the teacher
- draw and label the mirror
- add an arrow to the ray to show how the teacher sees the student.

Use a ruler and sharp pencil for this drawing. [3]

[Total: 8]

© UCLES 2024

7 A washing machine has an electric motor and an electric heater. Fig. 7.1 shows a simplified circuit diagram for the washing machine.

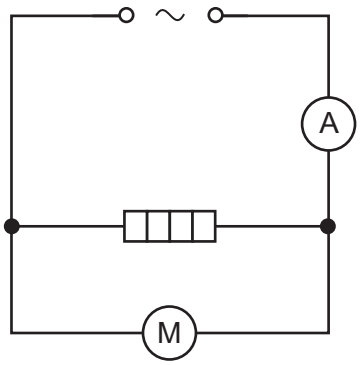

Fig. 7.1

The heater has a resistance of 25 Ω and the power supply has an electromotive force (e.m.f.) of 230 V.

(a) State the meaning of electromotive force.

View solution

.....

..... [2]

(b) State the potential difference (p.d.) across the heater.

View solution

p.d. = ... [1]

(c) Calculate the current in the heater.

View solution

Current = ... [2]

(d) The current in the motor is 1.6 A.
Determine the reading on the ammeter in Fig. 7.1. Explain your answer.

View solution

Ammeter reading .....

Explanation .....

.....

[2]

[Total: 7]

© UCLES 2024

8 A fisherman uses high frequency sound waves to locate fish in the sea. Fig. 8.1 shows the sound waves emitted from the boat.

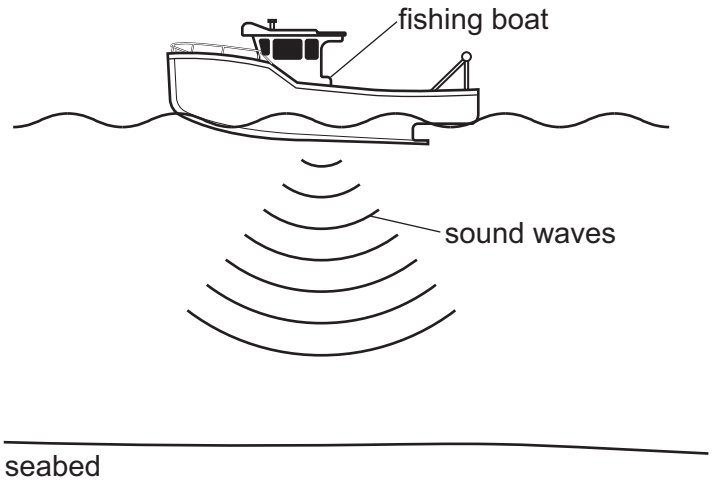

Fig. 8.1 (not to scale)

(a) State the name of sound waves which have a frequency greater than 20 kHz.

View solution

..... [1]

(b) High frequency sound waves travel from the boat through the sea water.
The speed of sound in water is 1500 m / s. The seabed is 22 m below the boat.

View solution

Calculate the time taken for the boat to receive the reflected wave from the seabed after the sound is emitted.

time = ... [3]

(c) Fig. 8.2 shows a fish below the boat.

View solution

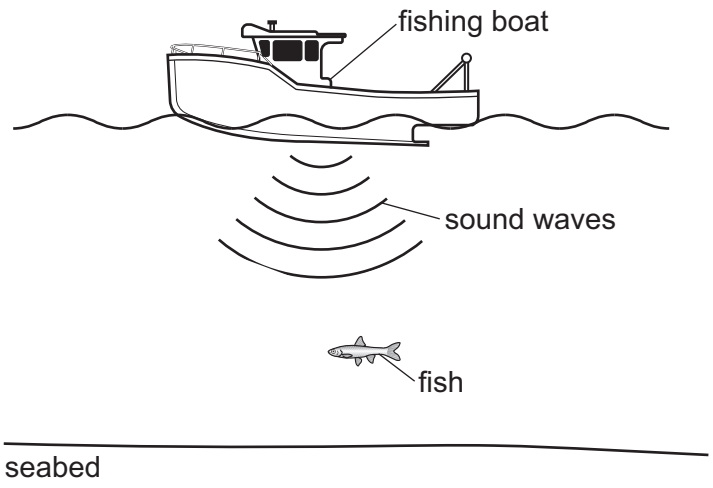

Fig. 8.2 (not to scale)

Describe and explain how the reflected sound wave received by the boat from the fish differs from the reflected sound wave received from the seabed.

.....

.....

..... [2]

[Total: 6]

9 Fig. 9.1 shows a wireless charging plate used to charge the battery in a mobile phone (cell phone). The coil of wire is part of an electric circuit.

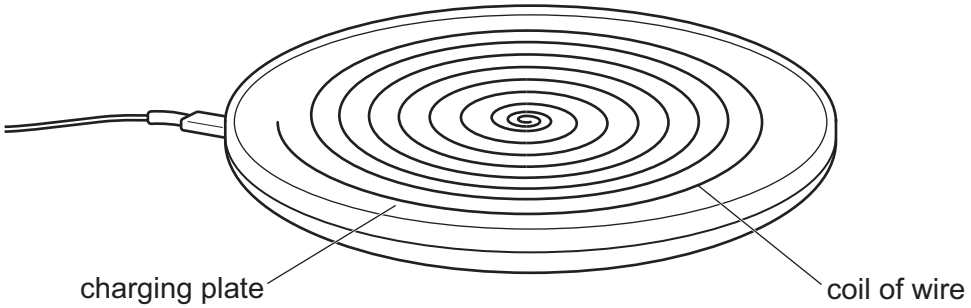

Fig. 9.1

The charging plate is connected to an a.c. power supply. The power supply is turned on.

View solution

(a) Describe the magnetic field around the charging plate in terms of its magnitude and direction.

.....

.....

..... [2]

(b) A mobile phone is placed on the charging plate as shown in Fig. 9.2. The coil in the mobile phone is part of a separate circuit that charges the battery.

View solution

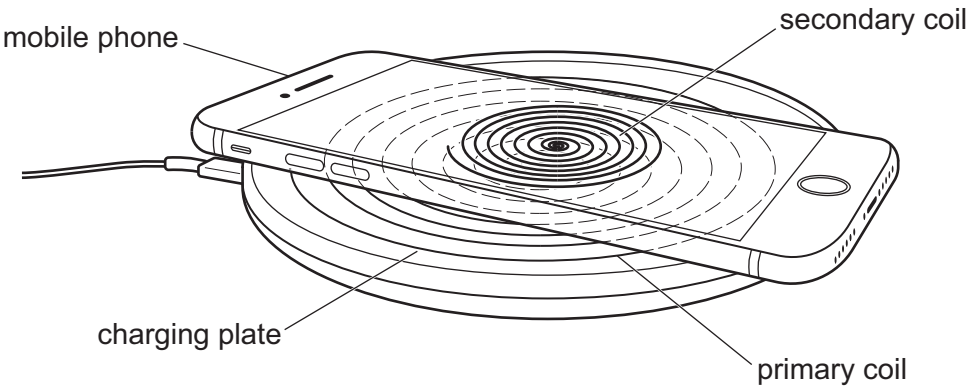

Fig. 9.2

The coil in the charging plate and the coil in the mobile phone act like a transformer.

(i) Explain why there is a current in the secondary coil shown in Fig. 9.2.

.....

.....

..... [2]

(ii) Suggest why the transformer made from the charging plate and mobile phone is not 100% efficient.

.....

..... [1]

(c) The mobile phone battery can be recharged using this charging plate and stores 4.5×10^4 J of energy when fully recharged. The current in the secondary coil is 0.63 A when the output voltage is 12 V.

View solution

(i) Calculate the time taken to fully recharge a completely uncharged battery.

time = ... [2]

View solution

(ii) Calculate the charge passing through the battery in 60 s.

charge = ... [2]

[Total: 9]

10 Carbon-14 ($^{14}_{6}C$) is a radioactive isotope of carbon. Carbon-12 ($^{12}_{6}C$) is not radioactive.

(a) Explain how an atom of carbon-14 ($^{14}_{6}C$) differs from an atom of carbon-12 ($^{12}_{6}C$).

View solution

.....

..... [2]

(b) All living organisms contain both carbon-12 atoms and carbon-14 atoms. The ratio of carbon-14 to carbon-12 is $1 : 1 \times 10^{12}$.

View solution

Carbon-14 has a half-life of 5700 years.

(i) When an organism dies no new carbon is absorbed. The amount of carbon-12 in the dead organism remains fixed.

Describe how the amount of carbon-14 in the dead organism decreases with time.

.....

.....

..... [2]

(ii) A sample of wood contains carbon-14 to carbon-12 atoms in the ratio $1 : 4 \times 10^{12}$.

View solution

Calculate how many years ago the tree died.

..... years ago [3]

(c) Other radioactive isotopes have different half-lives.

View solution

Suggest a use of a radioactive isotope with a half-life of one hour.

Explain why a short half-life is suitable for this use.

use .....

explanation .....

.....

[2]

[Total: 9]

© UCLES 2024

11 (a) (i) State the name of **one** planet that has an orbit further away from the Sun than Venus.

..... [1]

(ii) State the name of **one** planet that has an orbit closer to the Sun than Venus. View solution

..... [1]

(b) Venus has an average radius of orbit of 1.1×10^{11} m and an orbital period of 220 Earth days. Calculate the average orbital speed of Venus. Give your answer in m/s.

View solution

average orbital speed = ... m/s [3]

(c) State the relationship between the orbital speeds of the planets and their distances from the Sun.

.....

..... [1]

(d) Comets are balls of ice and dust. Some comets orbit the Sun.

View solution

State how the speed of a comet changes as it orbits the Sun.
Explain your answer using ideas about the conservation of energy.

You may include a labelled diagram in your answer.

.....

.....

..... [3]

[Total: 9]

© UCLES 2024

BLANK PAGE

Permission to reproduce items where third-party owned material protected by copyright is included has been sought and cleared where possible. Every reasonable effort has been made by the publisher (UCLES) to trace copyright holders, but if any items requiring clearance have unwittingly been included, the publisher will be pleased to make amends at the earliest possible opportunity.

To avoid the issue of disclosure of answer-related information to candidates, all copyright acknowledgements are reproduced online in the Cambridge Assessment International Education Copyright Acknowledgements Booklet. This is produced for each series of examinations and is freely available to download at www.cambridgeinternational.org after the live examination series.

Cambridge Assessment International Education is part of Cambridge Assessment. Cambridge Assessment is the brand name of the University of Cambridge Local Examinations Syndicate (UCLES), which is a department of the University of Cambridge.

© UCLES 2024