Cambridge Assessment International Education

Cambridge IGCSE™

CANDIDATE NAME									
CENTRE NUMBER						CANDIDATE NUMBER				

PHYSICS **0625/43**

Paper 4 Theory (Extended) **October/November 2024**

1 hour 15 minutes

You must answer on the question paper.

No additional materials are needed.

INSTRUCTIONS

- Answer **all** questions.
- Use a black or dark blue pen. You may use an HB pencil for any diagrams or graphs.
- Write your name, centre number and candidate number in the boxes at the top of the page.
- Write your answer to each question in the space provided.
- Do **not** use an erasable pen or correction fluid.
- Do **not** write on any bar codes.
- You may use a calculator.
- You should show all your working and use appropriate units.
- Take the weight of 1.0 kg to be 9.8 N (acceleration of free fall = 9.8 m / s^2).

INFORMATION

- The total mark for this paper is 80.
- The number of marks for each question or part question is shown in brackets [ ].

This document has **20** pages.

© UCLES 2024

1 **(a)** **(i)** State the difference between a scalar quantity and a vector quantity.

View solution

.....

..... [1]

(ii) Define momentum.

View solution

.....

..... [1]

(b) A test car crashes into a barrier to test the safety features. The test car has a total mass of 950 kg. It is moving with constant velocity from time $t = 0$ for 4.0 s. At $t = 4.0$ s, the car hits the barrier.

View solution

Fig. 1.1 shows the car as it hits the barrier.

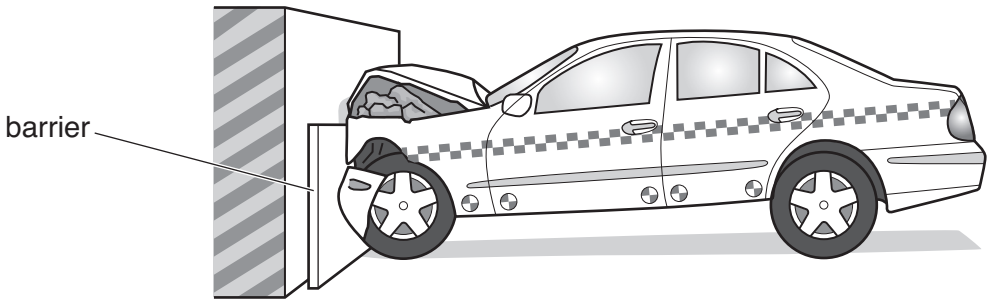

Fig. 1.1

(i) During the test crash, the resultant force acting on the car is 27 000 N. The car takes 1.5 s to come to rest. The deceleration is uniform.

Calculate the initial velocity of the car.

initial velocity = ... [3]

© UCLES 2024

(ii) On Fig. 1.2, sketch a speed–time graph to show the motion of the car from time $t = 0$ until the car becomes stationary.

View solution

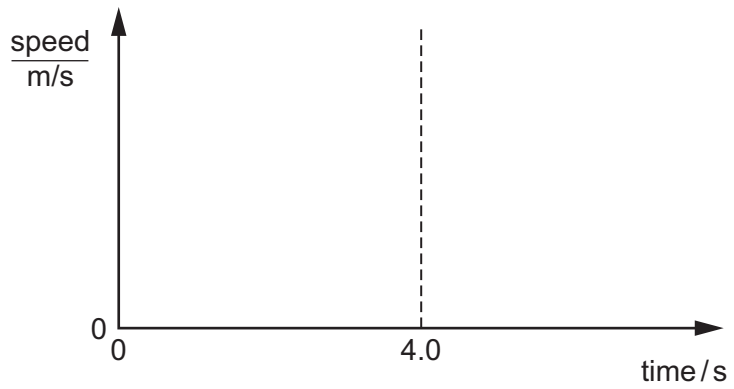

Fig. 1.2

[2]

[Total: 7]

2 **(a)** Describe an experiment to determine the spring constant of a spring.

View solution

State:

- the apparatus you need
- details of how to take measurements
- how to calculate the spring constant

You may use the space below to draw a **labelled** diagram as part of your answer.

.....

.....

.....

.....

.....

.....

.....

..... [4]

(b) Fig. 2.1 shows a baby in a baby bouncer. The baby bouncer consists of a holder suspended from a spring. The baby pushes his feet on the ground and bounces gently up and down.

View solution

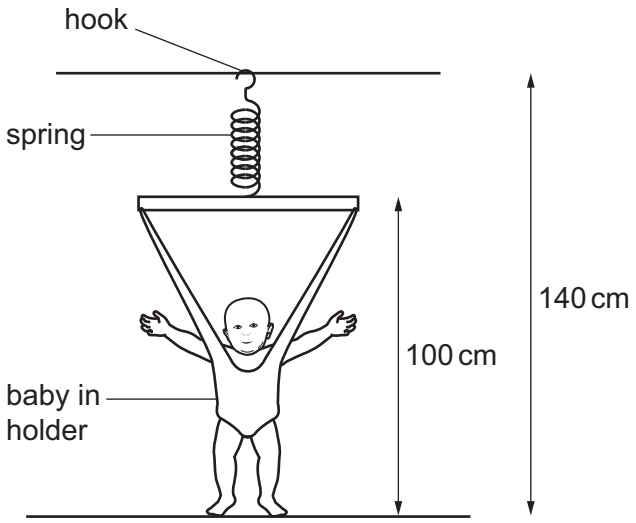

Fig. 2.1

(i) Two springs Q and R are tested to determine their spring constants.

Each spring is tested up to its limit of proportionality.

Define 'limit of proportionality'.

.....

..... [1]

(ii) Table 2.1 shows the results of the tests.

View solution

spring	spring constant / N / cm
Q	7.8
R	1.1

Table 2.1

The total weight of the baby and the holder is 120 N.

Calculate the extension of each spring for this weight.

extension of spring Q = ...

extension of spring R = ...

[1]

© UCLES 2024

(iii) The unstretched length of each spring is 25 cm.

State and explain which spring would be more suitable for the baby bouncer in Fig. 2.1.

spring .....

View solution

explanation .....

.....

[1]

[Total: 7]

3 Fig. 3.1 shows a portable shower used on a campsite. The bag is filled with water. The water is heated using infrared radiation from the Sun.

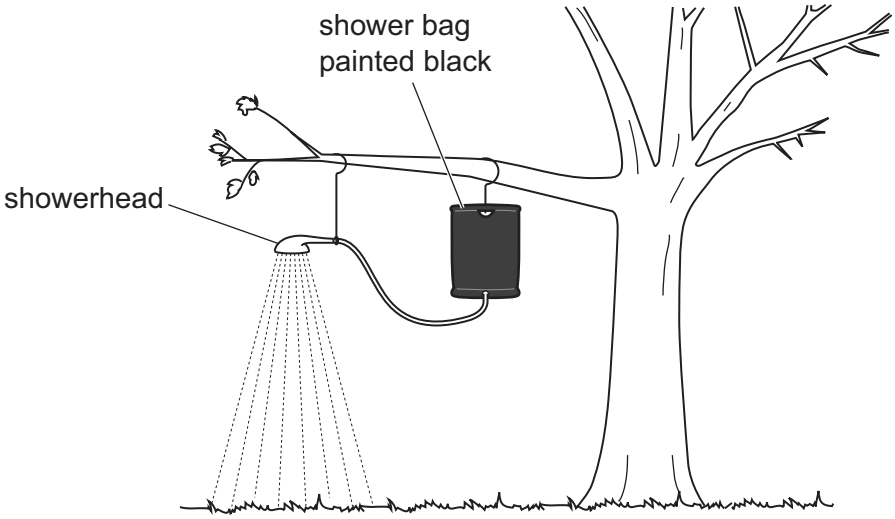

Fig. 3.1

(a) **(i)** Explain why the shower bag is painted black.

View solution

.....

..... [1]

(ii) Explain a **disadvantage** of radiation from the Sun being the only source to heat the water.

.....

..... [1]

(b) Solar energy is a renewable energy resource.

View solution

State **two other** renewable energy resources.

1 .....

2 .....

[2]

(c) During the day, the Sun shines on the shower bag and some of the energy in the infrared radiation from the Sun transfers to the thermal energy stores of the water.

The water absorbs 60% of the energy incident on the bag. The temperature of the water rises from 10 °C to 43 °C.

The mass of the water in the bag is 40 kg. The specific heat capacity of water is 4200 J / (kg °C).

Calculate the energy incident on the shower bag during the day.

View solution

Show your working.

energy = ... [4]

[Total: 8]

4 **(a)** Fig. 4.1 shows a ray of light as it enters the side of a plastic block. The ray of light passes from air into the plastic.

View solution

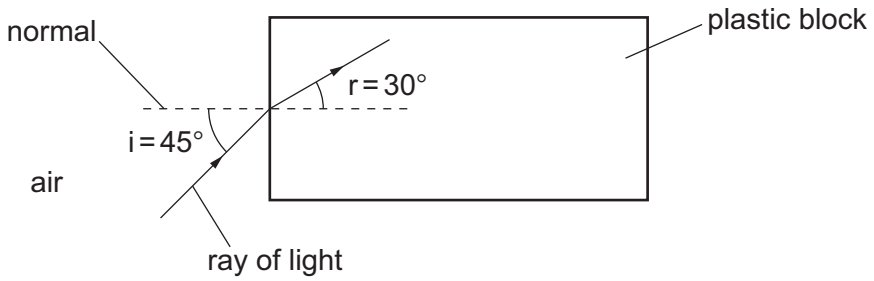

Fig. 4.1

(i) State how the speed, wavelength and frequency of the wave in the plastic block compare with their values in the air.

speed: .....

wavelength: .....

frequency: .....

[2]

(ii) Show that the refractive index of the plastic is 1.4.

View solution

Show your working.

[1]

(iii) Calculate the critical angle for the plastic.

View solution

critical angle = ... [2]

© UCLES 2024

(b) Fig. 4.2 shows the same plastic as in **(a)** used to make an optical fibre. A ray of light is passing along the fibre.

View solution

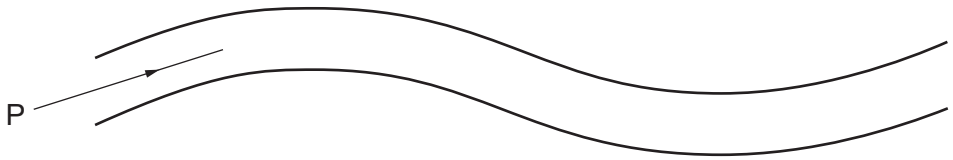

Fig. 4.2

(i) Carefully continue the ray of light P until it reaches the other end of the fibre. [2]

(ii) State **two** uses for optical fibres.

View solution

1 .....

2 .....

[2]

[Total: 9]

5 Fig. 5.1 shows a metal sphere S. The sphere has been charged with a negative charge.

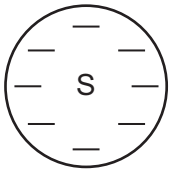

Fig. 5.1

View solution

(a) (i) There is an electric field around sphere S.

On Fig. 5.1, draw **four** field lines to show the pattern of the field and indicate the direction of the field with arrows on the lines. [2]

View solution

(ii) Fig. 5.2 shows a position X next to sphere S.

A small negatively charged particle is placed at position X.

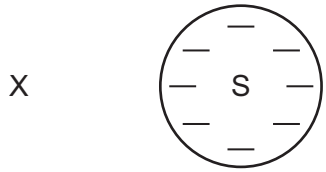

Fig. 5.2

State the direction of the force on the negatively charged particle at X due to the electric field around sphere S.

..... [1]

(iii) The negatively charged particle at X is released from rest.

Describe the motion of the small negatively charged particle due to the electric field around sphere S.

.....

.....

..... [2]

View solution

(b) Fig. 5.3 shows sphere S being spray painted. Sphere S is negatively charged. As the paint particles exit the wide nozzle of the paint sprayer, they become charged with a positive charge.

View solution

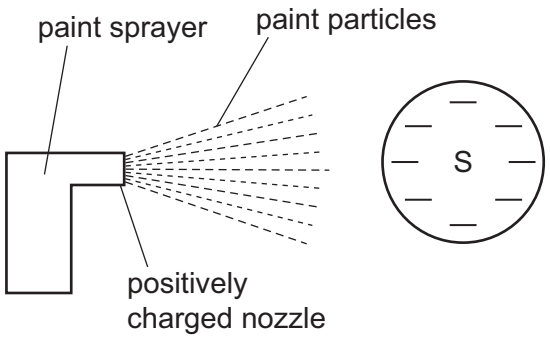

Fig. 5.3

(i) Explain why the paint particles spread out when they leave the nozzle.

.....

..... [1]

(ii) The sphere can be painted by hand using a paintbrush.

Suggest and explain **one** advantage to using charged paint from a spray gun to paint sphere S.

advantage .....

explanation .....

.....

.....

[2]

[Total: 8]

View solution

6 **(a)** A car windscreen is covered in condensation (small droplets of water). Thermal energy is used to remove the droplets of water. The thermal energy is provided by three resistors on the windscreen.

View solution

Fig. 6.1 shows two possible circuits for the three resistors.

The three resistors are identical.

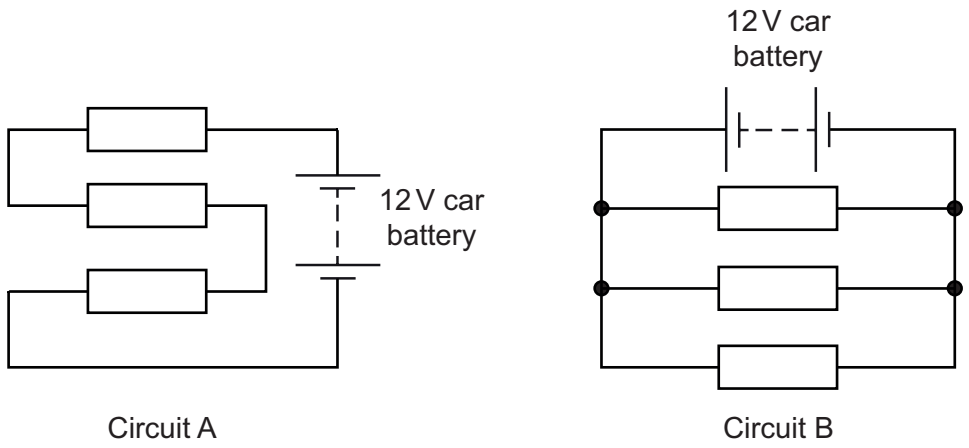

Fig. 6.1

(i) Describe **two** advantages of using Circuit B.

1 .....

.....

2 .....

.....

[2]

(ii) Describe, in terms of the water particles, the process by which the water droplets are removed from the car windscreen using the heater.

.....

.....

.....

..... [2]

View solution

(b) Fig. 6.2 shows a circuit containing two resistors, P and Q. The circuit is powered by a 12 V battery.

View solution

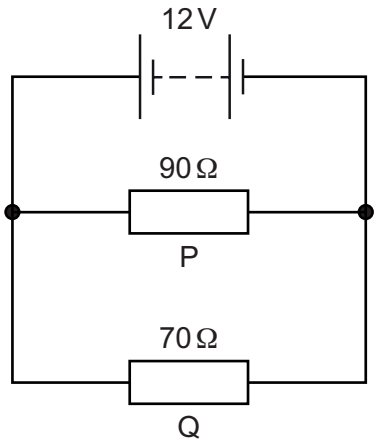

Fig. 6.2

(i) Calculate the current in resistor Q.

current = ... [2]

(ii) Calculate the energy transferred electrically when the current calculated in **(b)(i)** is present in resistor Q for 5 minutes.

View solution

energy = ... [3]

(iii) Energy is transferred from the battery by the electrical current.

View solution

State the energy store in the battery.

..... [1]

(iv) Calculate the total resistance of the circuit.

View solution

total resistance = ... [2]

[Total: 12]

© UCLES 2024

7 Fig. 7.1 shows a barrier at the entrance to a car park. The wooden barrier arm has a weight of 60 N which acts through the centre of gravity at the position shown on Fig. 7.1.

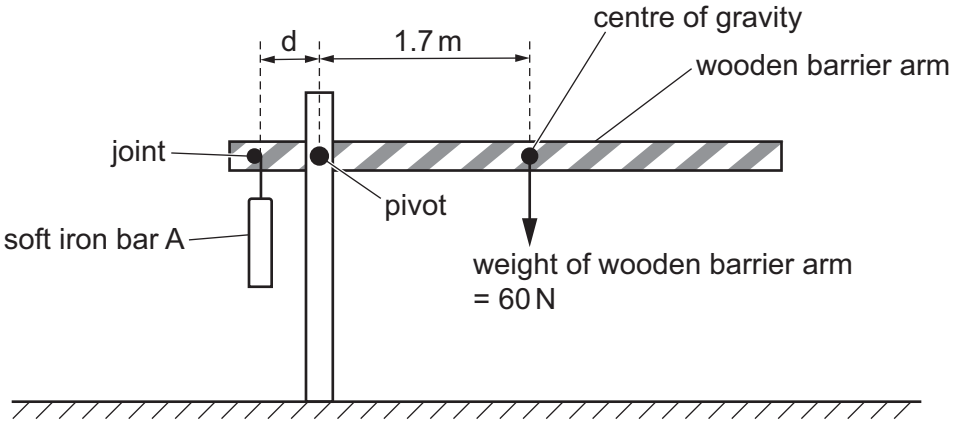

Fig. 7.1

(a) Initially the wooden barrier arm is horizontal.

View solution

(i) Using Fig. 7.1, calculate the clockwise moment of the weight of the wooden arm about the pivot.

clockwise moment = ... Nm [1]

(ii) The wooden barrier arm is in equilibrium. The mass of the soft iron bar A is 23 kg.

View solution

Calculate the distance d between the pivot and the joint holding the soft iron bar A.

distance d = ... [3]

(b) Fig. 7.2 shows a coil attached to a power supply placed below the soft iron bar A.

View solution

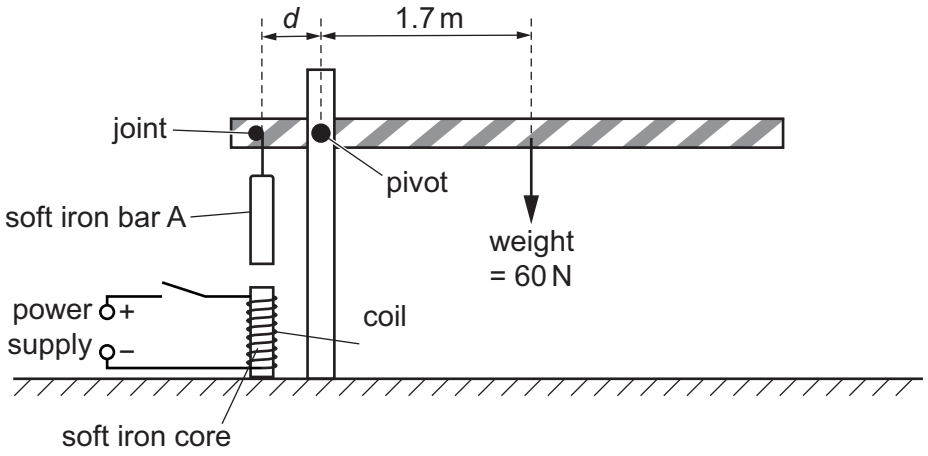

Fig. 7.2

(i) State and explain what happens to the wooden barrier arm when the switch in the coil circuit is closed.

statement .....

explanation .....

.....

.....

.....

[3]

(ii) The switch is opened. An operator decreases the potential difference across the coil and the switch is closed.

State and explain how the effect on the wooden barrier arm compares with the effect in **(b)(i)**.

statement .....

explanation .....

.....

[2]

(iii) A student suggests that the soft iron bar A is replaced by a steel bar. Explain why a steel bar is less effective than a soft iron bar in the barrier.

.....

.....

..... [2]

[Total: 11]

© UCLES 2024

8 An isotope of boron is used in the treatment of cancer in the brain.

Boron sticks to cancer cells in the brain.

(a) The isotope of boron is bombarded with neutrons then undergoes fission to form lithium and alpha-particles.

View solution

(i) Describe **one** difference between fission and fusion.

.....

..... [1]

(ii) A nucleus of boron (B) contains 5 protons and 5 neutrons. Complete the nuclide equation for this fission reaction.

View solution

$$\text{.....}^{\text{.....}}\text{B} + {}^{1}_{0}\text{n} \rightarrow \text{.....}^{\text{.....}}\text{Li} + \text{.....}^{\text{.....}}\alpha$$

[3]

(b) The alpha-particles destroy the cancer cells. Suggest and explain **one** reason why alpha particles are more suitable than gamma radiation for use in this treatment of brain cancer.

.....

.....

..... [2]

(c) Other cancers are treated with gamma radiation. Describe **one** safety precaution a nurse or radiologist takes during this treatment.

.....

..... [1]

[Total: 7]

View solution

9 **(a)** Fig. 9.1 shows a diagram of a transverse wave.

View solution

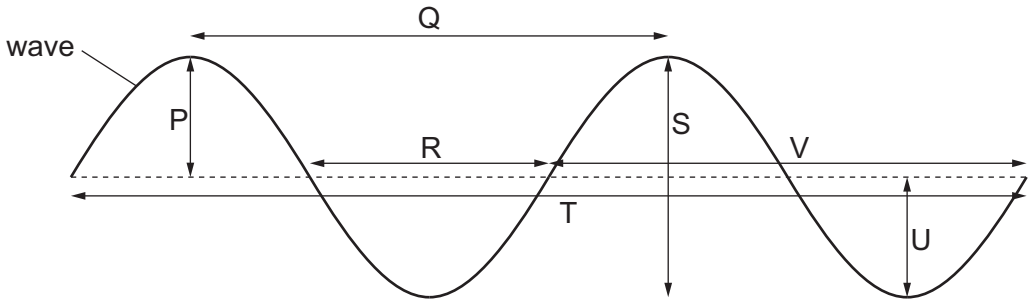

Fig. 9.1

From Fig. 9.1, identify all the lengths which represent **one** wavelength.

..... [1]

(b) Hydrogen in a very distant galaxy emits electromagnetic radiation which is observed on the Earth.

Scientists on the Earth measure the wavelength of the radiation from the very distant galaxy. The wavelength is 918 nm.

On the Earth, hydrogen in the laboratory emits electromagnetic radiation of wavelength 656 nm.

Name the effect that the scientists observe and state what this shows about the very distant galaxy.

.....

.....

..... [2]

View solution

(c) Table 9.1 shows a wavelength of electromagnetic radiation from hydrogen observed in the laboratory and from three galaxies.

The galaxies are at different distances from the Earth.

View solution

Table 9.1

object	wavelength of hydrogen from object, observed on the Earth / nm
gas tube in laboratory	656
nearby galaxy	667
distant galaxy	750
very distant galaxy	918

Describe what Table 9.1 shows about the motions of the galaxies and state what this suggests is happening to the Universe.

.....

.....

..... [2]

[Total: 5]

© UCLES 2024

10 (a) Stars more massive than the Sun can eventually form black holes.

View solution

Describe how a black hole can be formed from a more massive star.

.....

.....

.....

.....

..... [3]

(b) The star system V404 Cygni contains a black hole. The system is approximately 7800 light-years from the Earth.

(i) Describe what is meant by a light-year.

View solution

.....

..... [1]

(ii) Calculate the approximate distance from V404 Cygni to the Earth in km.

View solution

distance = ... km [2]

[Total: 6]

Permission to reproduce items where third-party owned material protected by copyright is included has been sought and cleared where possible. Every reasonable effort has been made by the publisher (UCLES) to trace copyright holders, but if any items requiring clearance have unwittingly been included, the publisher will be pleased to make amends at the earliest possible opportunity.

To avoid the issue of disclosure of answer-related information to candidates, all copyright acknowledgements are reproduced online in the Cambridge Assessment International Education Copyright Acknowledgements Booklet. This is produced for each series of examinations and is freely available to download at www.cambridgeinternational.org after the live examination series.

Cambridge Assessment International Education is part of Cambridge Assessment. Cambridge Assessment is the brand name of the University of Cambridge Local Examinations Syndicate (UCLES), which is a department of the University of Cambridge.

© UCLES 2024