Cambridge Assessment International Education

Cambridge IGCSE™

CANDIDATE NAME									
CENTRE NUMBER						CANDIDATE NUMBER				

PHYSICS **0625/52**

Paper 5 Practical Test **October/November 2024**

1 hour 15 minutes

You must answer on the question paper.

You will need: The materials and apparatus listed in the confidential instructions

INSTRUCTIONS

- Answer **all** questions.
- Use a black or dark blue pen. You may use an HB pencil for any diagrams or graphs.
- Write your name, centre number and candidate number in the boxes at the top of the page.
- Write your answer to each question in the space provided.
- Do **not** use an erasable pen or correction fluid.
- Do **not** write on any bar codes.
- You may use a calculator.
- You should show all your working and use appropriate units.

INFORMATION

- The total mark for this paper is 40.
- The number of marks for each question or part question is shown in brackets [ ].

For Examiner's Use	
1	
2	
3	
4	
Total	

This document has **12** pages. Any blank pages are indicated.

© UCLES 2024

1 In this experiment, you will take measurements of a stack of glass microscope slides to estimate the number of slides in the stack.

Fig. 1.1 shows the stack of slides.

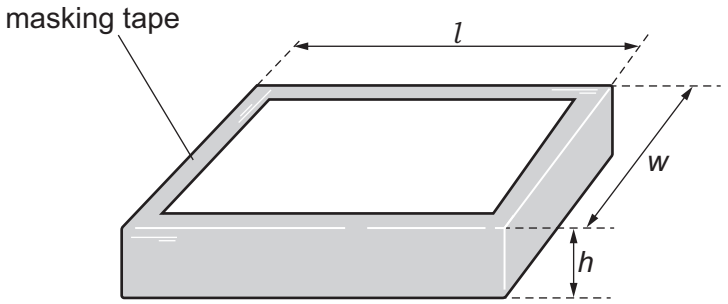

Fig. 1.1

(a) Measure the length l, the width w and the height h of the stack of slides in centimetres to the nearest millimetre.

Do **not** remove any slides from the stack.

View solution

l = ... cm

w = ... cm

h = ... cm
[2]

(b) (i) Use the balance provided to measure the mass M of the stack of slides to the nearest 0.1 g.

M = ... g [1]

(ii) Calculate the density ρ of the glass. Use your results from **(a)** and **(b)(i)** and the equation shown.

$$\rho = \frac{M}{lwh}$$

View solution

Give the unit for your answer.

ρ = ...

unit = ...
[2]

© UCLES 2024

(c) The mass m and the thickness t of a single microscope slide are written on the piece of card.

Write down the values of m and t that are on the card.

m = ... g

t = ... cm

(i) Use your answer to **(b)(i)** and information from the card in **(c)** to estimate the number of microscope slides N_1 in the stack of slides.

View solution

N_1 = ... [2]

(ii) Use your answer to **(a)** and information from the card in **(c)** to obtain another estimate of the number of microscope slides N_2 in the stack of slides.

View solution

N_2 = ... [1]

(d) Two quantities can be considered to be equal within the limits of experimental accuracy if their values are within 10% of each other.

State whether your values of N_1 and N_2 from **(c)(i)** and **(c)(ii)** can be considered equal.

View solution

Support your statement with a calculation.

calculation

statement ..... [2]

(e) Suggest **one** reason why the estimated values of N may be different.

View solution

.....

..... [1]

[Total: 11]

© UCLES 2024

2 In this experiment, you will investigate the resistance of a light-emitting diode (LED) when the current in it changes.

The supervisor has set up the circuit as shown in Fig. 2.1.

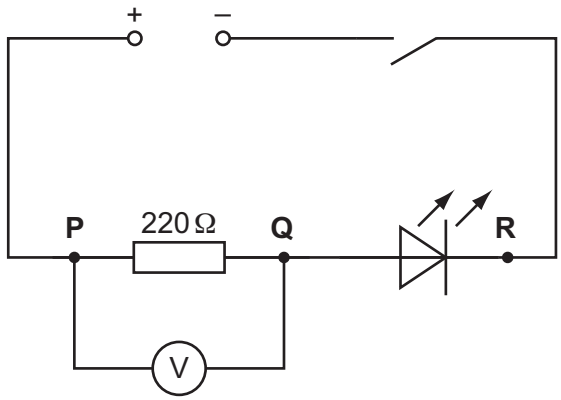

Fig. 2.1

View solution

(a) • Close the switch.

Record the voltmeter reading V_{PQ} across the 220 Ω resistor in the top row of Table 2.1.

• Open the switch. [1]

Table 2.1

resistance between P and Q / Ω	V_{PQ} /	V_{QR} /	I /	R_{LED} / Ω
220				
330				

View solution

(b) • Disconnect the voltmeter from points P and Q.

• Reconnect the voltmeter across the LED between points Q and R.

• Ensure that the positive terminal of the voltmeter is connected to Q.

• Close the switch.

Record the voltmeter reading V_{QR} in the top row of Table 2.1.

• Open the switch. [1]

© UCLES 2024

(c) Calculate the current I in the circuit in part **(a)** using the equation

View solution

$$I = \frac{V_{PQ}}{R}$$

where $R = 220\,\Omega$.

Record your answer in the top row of Table 2.1. [1]

(d) **(i)** Calculate the resistance R_{LED} of the LED using the equation

View solution

$$R_{LED} = \frac{V_{QR}}{I}$$

Record your answer to a suitable number of significant figures for this experiment in the top row of Table 2.1. [2]

(ii) Complete the column headings in Table 2.1 by inserting the missing units. [1]

(e) • Remove the $220\,\Omega$ resistor from the circuit and replace it with the $330\,\Omega$ resistor.

• Reconnect the voltmeter across the resistor between points P and Q. Ensure that the positive terminal is connected to P.

View solution

Repeat parts **(a)** to **(d)** for the $330\,\Omega$ resistor. [2]

(f) As the resistance between terminals P and Q changes, the current in the circuit changes.

Use your results in Table 2.1 to write a conclusion, stating how the change in current affects the voltmeter reading V_{QR} across the LED and the resistance R_{LED} of the LED.

.....

.....

.....

..... [2]

(g) A student attempts to set up the circuit shown in Fig. 2.1. The student finds that when the switch is closed, the LED does not light up.

View solution

Suggest what the student may have done incorrectly while setting up the circuit.

..... [1]

[Total: 11]

© UCLES 2024

3 In this experiment, you will investigate the image formed by a converging lens.

Refer to Fig. 3.1.

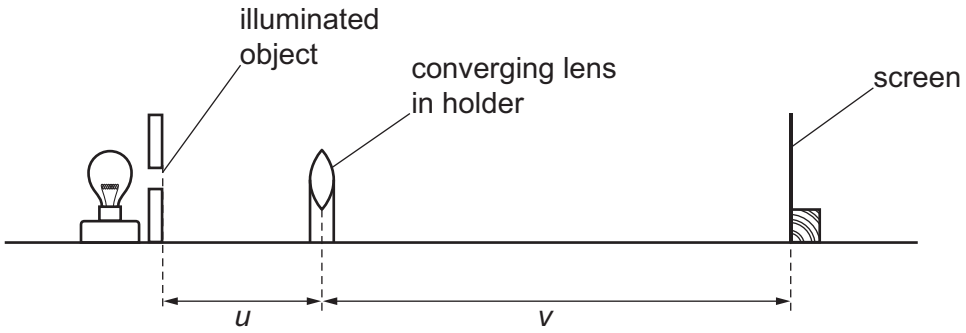

Fig. 3.1

View solution

(a) • Switch on the lamp.

• Place the lens at a distance u = 20.0 cm from the illuminated object (the triangular hole in the card).

• Adjust the position of the screen until a sharp image of the illuminated object is formed on the screen.

Measure, to the nearest 0.1 cm, the image distance v from the centre of the lens to the screen.

Record the image distance v in the top row of Table 3.1.

Table 3.1

object distance u / cm	image distance v / cm
20.0	
25.0	
35.0	
45.0	
55.0	
60.0	

[1]

© UCLES 2024

(b) **(i)** The diagram in Fig. 3.2 shows the illuminated object.

View solution

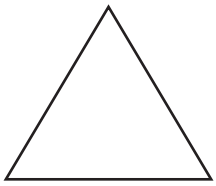

illuminated object

Fig. 3.2

In the space below the illuminated object, draw a diagram to show how the image that you observe on the screen compares with the object. [1]

(ii) Calculate the magnification m of the image using the equation shown.

View solution

$$m = \frac{v}{u}$$

m = ... [1]

(c) Repeat the procedure in **(a)** for values of u = 25.0 cm, u = 35.0 cm, u = 45.0 cm, u = 55.0 cm and u = 60.0 cm. [1]

View solution

(d) Plot a graph of v/cm (y-axis) against u/cm (x-axis).

View solution

Draw the best-fit curve.

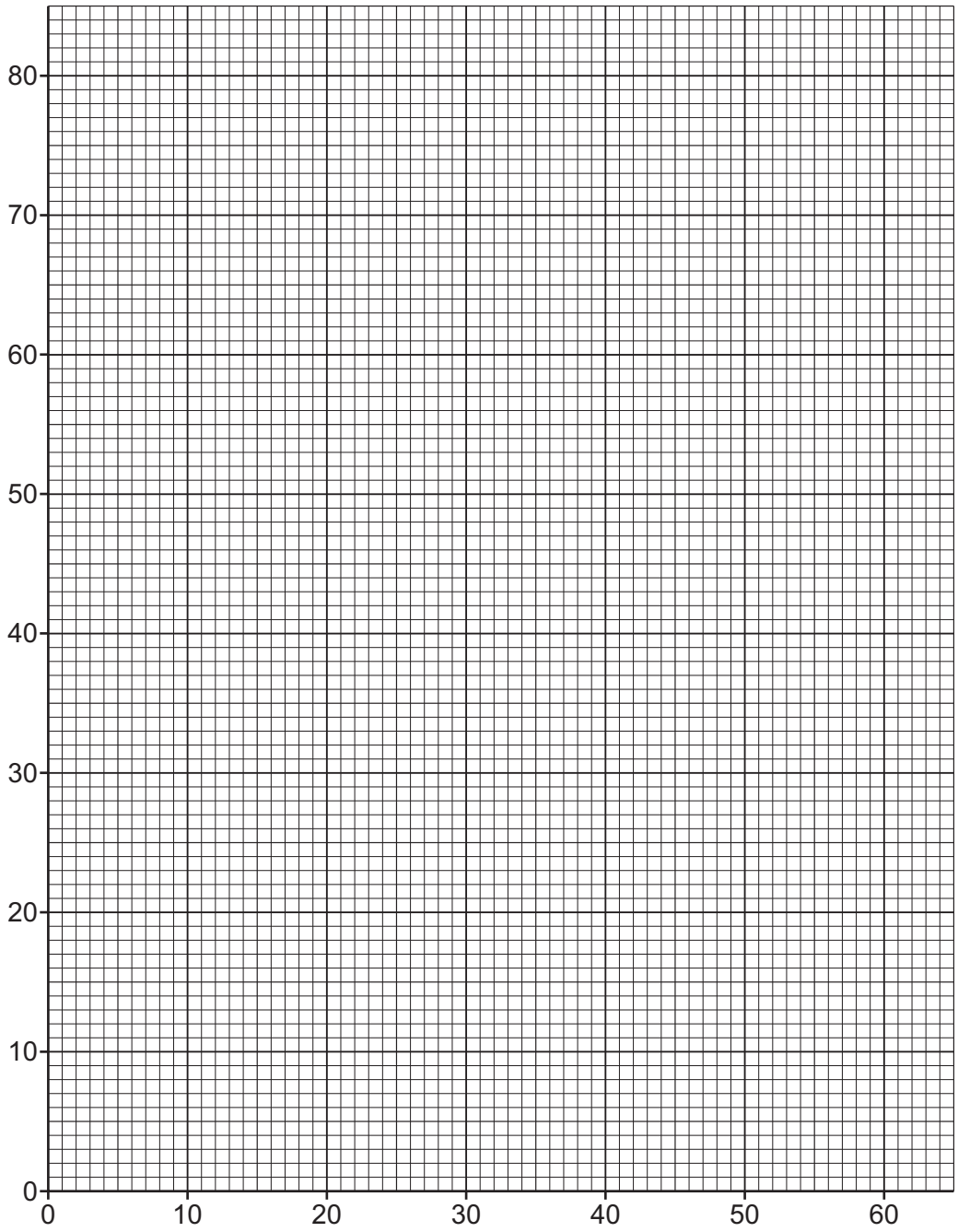

[3]

(e) Use your graph to find the value of v when u = 30.0 cm. Show clearly on the graph how you obtained the necessary information

View solution v = ... cm [2]

(f) The focal length f of the lens can be found using the equation $f = \frac{uv}{(u + v)}$.

View solution

Use the values of u and v from **(e)** to calculate the focal length of the lens.

f = ... cm [1]

© UCLES 2024

(g) State **one** technique you use when doing the experiment to ensure that the image on the screen is as clearly focussed as possible.

.....

.....

..... [1]

[Total: 11]

View solution

4 Hot water is poured into a glass beaker and allowed to cool down.

Plan an experiment to investigate how the rate at which the water cools depends upon the diameter of the water surface exposed to the air.

View solution

You are provided with:

- a supply of hot water
- a set of glass beakers of different sizes
- a measuring cylinder.

You may use any other common laboratory apparatus.

You are **not** required to do this investigation.

In your plan, include:

- any other apparatus needed
- a brief description of the method, including what you will measure and how you will make sure your measurements are accurate
- the key variables you will control
- a results table to record your measurements (you are **not** required to enter any readings in the table)
- how you will process your results to draw a conclusion.

You may include a labelled diagram if you wish.

© UCLES 2024

[7]

BLANK PAGE

Permission to reproduce items where third-party owned material protected by copyright is included has been sought and cleared where possible. Every reasonable effort has been made by the publisher (UCLES) to trace copyright holders, but if any items requiring clearance have unwittingly been included, the publisher will be pleased to make amends at the earliest possible opportunity.

To avoid the issue of disclosure of answer-related information to candidates, all copyright acknowledgements are reproduced online in the Cambridge Assessment International Education Copyright Acknowledgements Booklet. This is produced for each series of examinations and is freely available to download at www.cambridgeinternational.org after the live examination series.

Cambridge Assessment International Education is part of Cambridge Assessment. Cambridge Assessment is the brand name of the University of Cambridge Local Examinations Syndicate (UCLES), which is a department of the University of Cambridge.

© UCLES 2024