Cambridge Assessment International Education

Cambridge IGCSE™

CANDIDATE NAME									
CENTRE NUMBER						CANDIDATE NUMBER				

PHYSICS **0625/53**

Paper 5 Practical Test **October/November 2024**

1 hour 15 minutes

You must answer on the question paper.

You will need: The materials and apparatus listed in the confidential instructions

INSTRUCTIONS

- Answer **all** questions.
- Use a black or dark blue pen. You may use an HB pencil for any diagrams or graphs.
- Write your name, centre number and candidate number in the boxes at the top of the page.
- Write your answer to each question in the space provided.
- Do **not** use an erasable pen or correction fluid.
- Do **not** write on any bar codes.
- You may use a calculator.
- You should show all your working and use appropriate units.

INFORMATION

- The total mark for this paper is 40.
- The number of marks for each question or part question is shown in brackets [ ].

For Examiner's Use	
1	
2	
3	
4	
Total	

This document has **12** pages.

© UCLES 2024

1 In this experiment, you will investigate the cooling of water in different sized beakers.

Refer to Fig. 1.1.

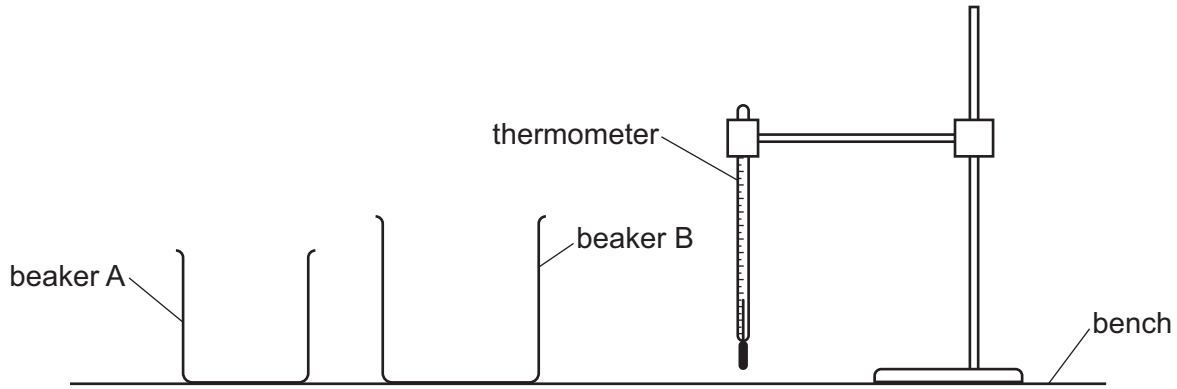

Fig. 1.1

(a) (i) Pour an estimated 75 cm^3 of hot water into beaker A. Use the markings on the beaker as a guide.
Place the thermometer in the water in beaker A.

Record, in the first row of Table 1.1, the temperature θ of the water at time t = 0 and immediately start the stop-watch.
Record the temperature θ of the water at times t = 30 s, t = 60 s, t = 90 s, t = 120 s, t = 150 s and t = 180 s.

Remove the thermometer from the beaker.

[1]

(ii) Repeat the procedure in **(a)(i)** for beaker B.

[2]

(iii) Suggest **one** possible source of inaccuracy in the procedure, even if it is carried out carefully.

.....

..... [1]

View solution

Table 1.1

	beaker A	beaker B
t/s	θ/°C	θ/°C
0		
30		
60		
90		
120		
150		
180		

(b) Write a conclusion describing the effect of changing the size of the beaker on the rate of cooling of the hot water.
Justify your answer by reference to values from your results.

View solution

.....

.....

.....

..... [2]

(c) Students in other schools do the same experiment **using identical apparatus**.

View solution

State **one** variable that they need to control in order to obtain readings as close as possible to your readings.

.....

..... [1]

(d) Calculate the average cooling rate x for beaker B.
Use your readings **for beaker B** in Table 1.1 and the equation

View solution

$$x = \frac{\theta_0 - \theta_{180}}{T}$$

where T = 180 s and θ_0 and θ_{180} are the temperatures of the water in beaker B at t = 0 and t = 180 s.

Include the unit for the cooling rate.

x = ... [1]

© UCLES 2024

(e) **(i)** A student thinks that more thermal energy is lost from the surface of the water in beaker B than from the sides of beaker B.
Suggest an additional experiment that she can do with beaker B to test her idea.
You are **not** required to do this additional experiment.

View solution

.....

..... [1]

(ii) Suggest how the cooling rate of the water in beaker B in this additional experiment compares with the value of *x* in **(d)** if her idea is correct.

.....

.....

..... [2]

[Total: 11]

View solution

2 In this experiment, you will determine the resistance of a resistor.

The circuit has been set up for you.

Refer to Fig. 2.1.

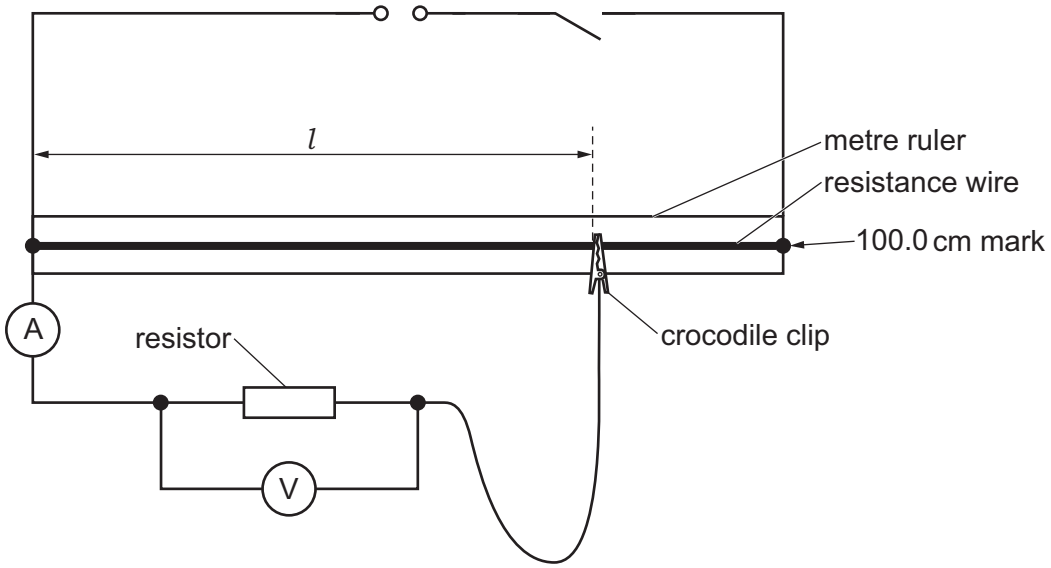

Fig. 2.1

View solution

(a) Attach the crocodile clip to a length l = 100.0 cm of the resistance wire.
Close the switch.

Measure the potential difference (p.d.) V_0 across the resistor for l = 100.0 cm.

V_0 = ... V [1]

Open the switch.

(b) Adjust the position of the crocodile clip on the resistance wire to a length l = 20.0 cm. Close the switch.

View solution

Measure and record, in Table 2.1, the value of the current I in the circuit.

Measure and record, in Table 2.1, values of the current I for l = 30.0 cm, l = 40.0 cm, l = 50.0 cm and l = 60.0 cm.

Open the switch.

Table 2.1

l/cm	I/A
20.0	
30.0	
40.0	
50.0	
60.0	

[2]

(c) Plot a graph of l/cm (y-axis) against I/A (x-axis).

View solution

Draw a best-fit straight line. You do not need to start the axes at the origin (0,0).

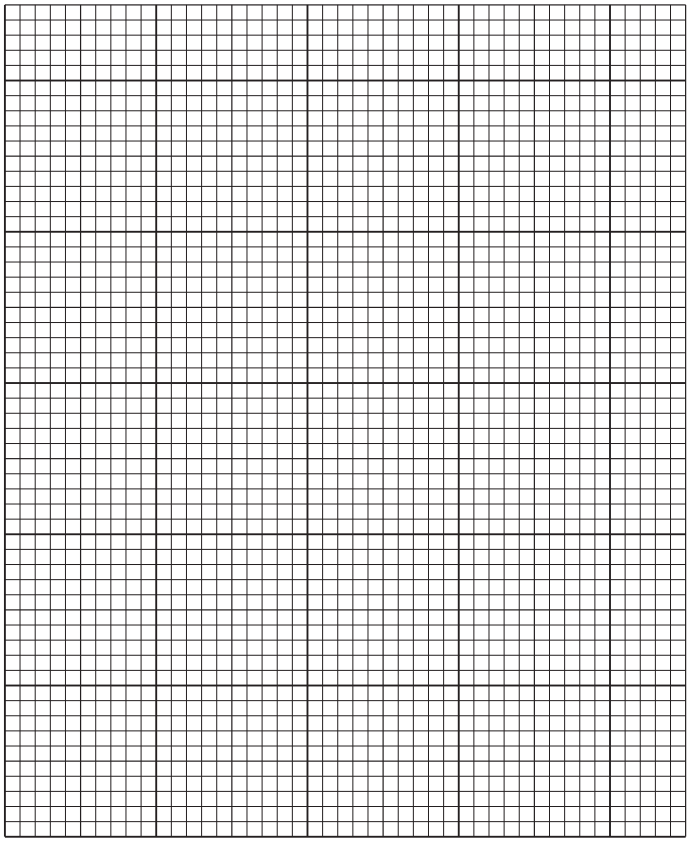

[4]

© UCLES 2024

(d) **(i)** Determine the gradient G of the graph. Show clearly on the graph how you obtained the necessary information.

View solution

G = ... [1]

(ii) Calculate the resistance R of the resistor.

View solution

Use your value of V_0 from **(a)** and the equation

$$R = \frac{G \times V_0}{100k} \text{ where } k = 1.0\,\text{A}$$

R = ... Ω [1]

(e) Suggest **one** practical reason why other students might not obtain the same result as you, even if they do the experiment carefully.

.....

..... [1]

(f) The resistance wire can become very hot during this type of experiment.

View solution

Suggest **one** change to the apparatus that prevents this.

.....

..... [1]

[Total: 11]

© UCLES 2024

3 In this experiment, you will investigate the refraction of light by a transparent block.
You will determine a quantity known as the refractive index of the material of the block.

Use the separate ray-trace sheet provided.

You may refer to Fig. 3.1 for guidance.

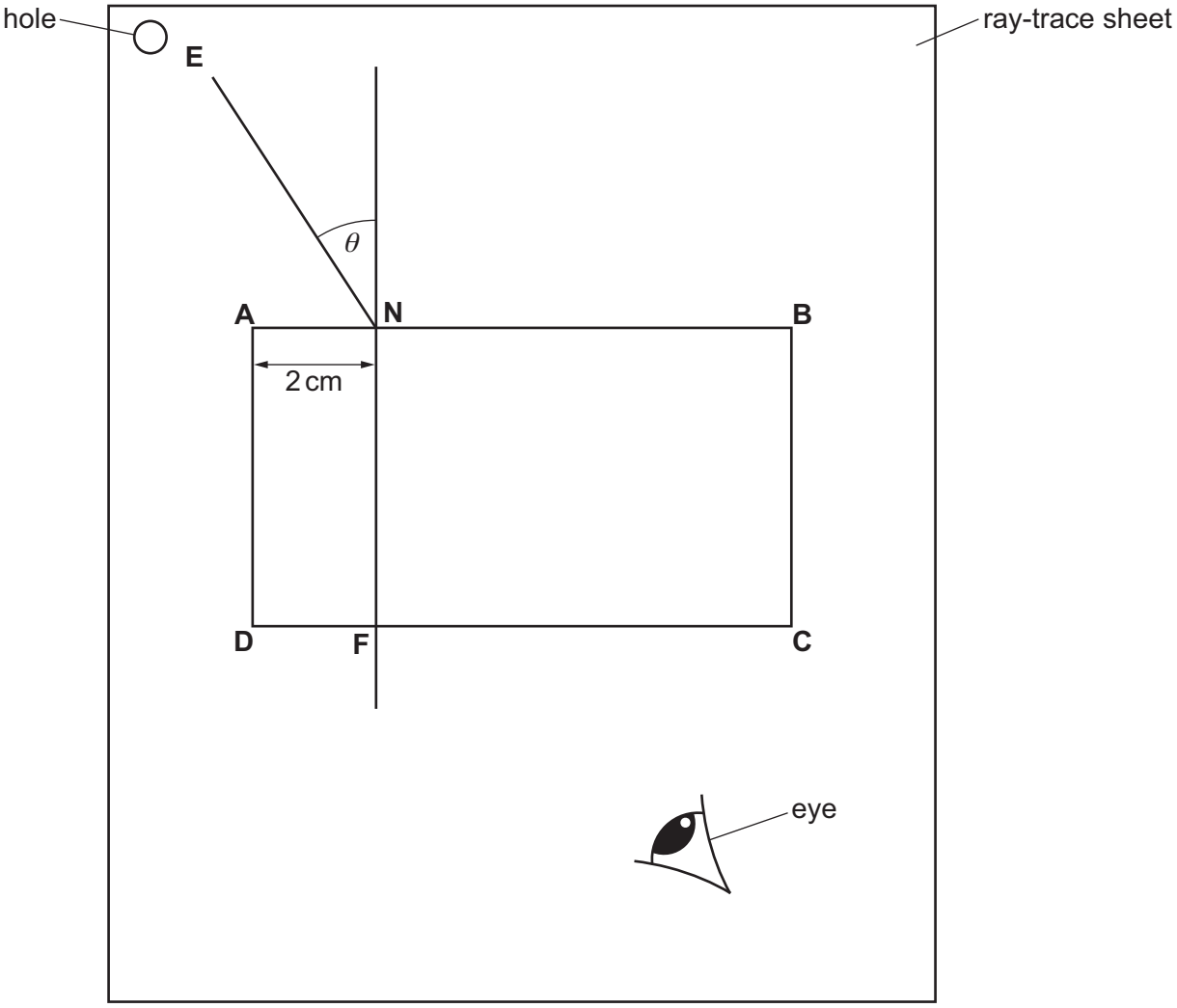

Fig. 3.1

(a) Place the transparent block approximately in the centre of the ray-trace sheet. Carefully draw round the block and label the corners **A**, **B**, **C** and **D** as indicated by Fig. 3.1.
Remove the block from the ray-trace sheet.

Draw a normal to line **AB** at a point **N**, 2 cm from **A**. Extend the normal downwards until it crosses the line **CD**. Label the point at which it crosses **CD** with the letter **F**.

Draw a line **NE**, as indicated by Fig. 3.1, 7 cm long and at an angle θ_1 = 15° to the normal.

[2]

View solution

(b) Replace the block in exactly the same position as in **(a)**.

View solution

Place two pins P_1 and P_2 on line **NE**, a suitable distance apart for accurate ray tracing. Mark with crosses and label the positions of P_1 and P_2.

View the images of P_1 and P_2 through the block, from the direction indicated by the eye in Fig. 3.1. Place two pins P_3 and P_4 so that pins P_3 and P_4 and the images of P_1 and P_2 all appear exactly one behind the other.
Mark with crosses and label the positions of P_3 and P_4.

Remove the block and pins from the ray-trace sheet.

Draw a straight line through P_3 and P_4. Extend this line to cross **NF**.
Label the point at which this line meets **NF** with the letter **G**. Label the point at which this line crosses **CD** with the letter **H**.

[2]

(c) Join points **H** and **N** with a straight line.

View solution

Measure the length *a* of line **HN**.

a = ... cm

Measure the length *b* of line **HG**.

b = ... cm

Calculate a value *n* for the refractive index. Use the equation $n = \frac{a}{b}$.

n = ...

[2]

(d) Draw a new line **NE**, as indicated by Fig. 3.1, 7 cm long and at an angle $\theta_2 = 40°$ to the normal.

Repeat the steps in **(b)**. Extend the new line **HG** until it crosses the line **HG** from **(b)**.

[1]

(e) **(i)** Measure α, the acute angle between the line **HG** from **(b)** and the line **HG** from **(d)**. (An acute angle is always less than 90°.)

View solution

α = ... [1]

(ii) A student suggests that angle α should be equal to the difference between angle θ_2 from **(d)** and angle θ_1 from **(a)**.

State whether your results support this suggestion. Justify your answer by reference to values from your results.

View solution

statement .....

justification .....

.....

[2]

(f) Suggest **one** technique to use in this type of experiment to ensure results are accurate.

.....

..... [1]

[Total: 11]

Write your name, centre number and candidate number on your ray-trace sheet.
Tie your ray-trace sheet into this Booklet between pages 8 and 9.

View solution

4 A student investigates the speed of a small trolley moving down a sloping ramp.

Plan an experiment which will enable him to compare the effect of different angles of slope on the average speed of the trolley between points on the ramp.

View solution

Average speed can be calculated from the equation:

$$\text{average speed} = \frac{\text{distance}}{\text{time}}$$

The apparatus available includes:

- a long ramp with a support that enables it to be set at different angles of slope
- a small trolley.

You are **not** required to do the experiment.

In your plan:

- list any additional apparatus needed
- explain briefly how to do the experiment, including how to take the measurements so that the average speed can be determined
- suggest a possible source of inaccuracy even if the method is carried out carefully
- state the key variables to keep constant
- draw a table, or tables, with column headings, to show how to display the readings (you are **not** required to enter any readings in the table)
- explain how to use the readings to reach a conclusion.

You may draw a diagram if it helps to explain your plan.

.....

.....

.....

.....

© UCLES 2024

.....

.....

.....

.....

.....

.....

.....

.....

.....

.....

.....

.....

.....

.....

.....

.....

.....

..... [7]

Permission to reproduce items where third-party owned material protected by copyright is included has been sought and cleared where possible. Every reasonable effort has been made by the publisher (UCLES) to trace copyright holders, but if any items requiring clearance have unwittingly been included, the publisher will be pleased to make amends at the earliest possible opportunity.

To avoid the issue of disclosure of answer-related information to candidates, all copyright acknowledgements are reproduced online in the Cambridge Assessment International Education Copyright Acknowledgements Booklet. This is produced for each series of examinations and is freely available to download at www.cambridgeinternational.org after the live examination series.

Cambridge Assessment International Education is part of Cambridge Assessment. Cambridge Assessment is the brand name of the University of Cambridge Local Examinations Syndicate (UCLES), which is a department of the University of Cambridge.