Cambridge Assessment International Education

Cambridge IGCSE™

CANDIDATE NAME									
CENTRE NUMBER						CANDIDATE NUMBER				

PHYSICS **0625/61**

Paper 6 Alternative to Practical **October/November 2024**

1 hour

You must answer on the question paper.

No additional materials are needed.

INSTRUCTIONS

- Answer **all** questions.
- Use a black or dark blue pen. You may use an HB pencil for any diagrams or graphs.
- Write your name, centre number and candidate number in the boxes at the top of the page.
- Write your answer to each question in the space provided.
- Do **not** use an erasable pen or correction fluid.
- Do **not** write on any bar codes.
- You may use a calculator.
- You should show all your working and use appropriate units.

INFORMATION

- The total mark for this paper is 40.
- The number of marks for each question or part question is shown in brackets [ ].

This document has **12** pages. Any blank pages are indicated.

© UCLES 2024

1 A student investigates the period of a pendulum. Fig. 1.1 shows the set up.

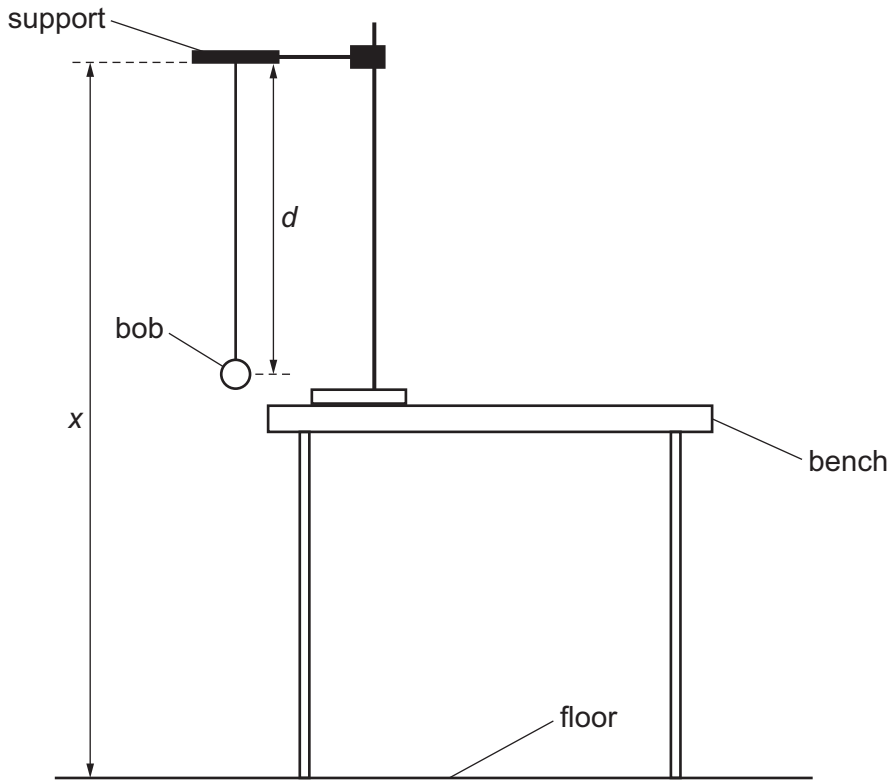

Fig. 1.1

(a) The student adjusts the length of the pendulum until the distance d measured from the bottom of the support to the centre of the bob is 90.0 cm.

View solution

He displaces the bob slightly and releases it so that it swings.

He measures, and records in Table 1.1, the time t for 10 complete oscillations.

Calculate, and record in Table 1.1, the period T of the pendulum. The period is the time for 1 complete oscillation.

Calculate a value for T^2 and record in Table 1.1. [2]

Table 1.1

d / cm	t /	T /	T^2 /
90.0	19.1		
45.0	13.5		

View solution

(b) The student repeats the procedure in **(a)** using a distance d = 45.0 cm.

Calculate, and record in Table 1.1, the period T of the pendulum.

Calculate a value for T^2 and record in Table 1.1. [1]

(c) Complete the column headings in Table 1.1. [2]

© UCLES 2024

(d) Explain why timing 10 oscillations gives a more accurate result for the period T than timing 1 oscillation.

.....

..... [1]

(e) Describe **one** technique that you use to improve accuracy when measuring the distance d.

You may draw a diagram to help your description.

View solution

.....

..... [1]

(f) Describe **one** technique that you use to improve accuracy when measuring the time t for 10 oscillations.

.....

.....

..... [1]

(g) The pendulum support is 40 cm above the bench. Estimate the distance x between the bottom of the pendulum support and the floor.

View solution $x =$ ..... cm [1]

(h) A student plans to plot a graph of T^2 against d. Suggest suitable values of d that the student can use to obtain measurements that are sufficient for this task.

.....

..... [2]

[Total: 11]

View solution

2 A student investigates the cooling of water in a metal container.

(a) The student uses a thermometer to measure room temperature θ_R. Room temperature is 23 °C. Show clearly, on Fig. 2.1, the reading θ_R.

View solution

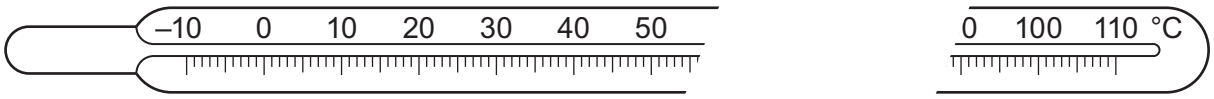

Fig. 2.1

[1]

(b) Fig. 2.2 shows the apparatus set up for the investigation.

View solution

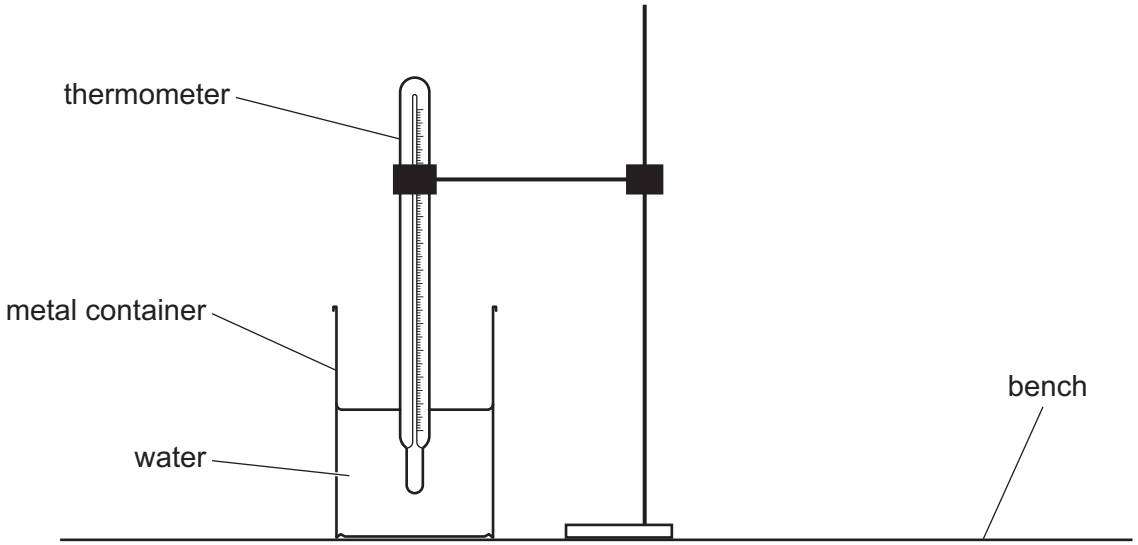

Fig. 2.2

The student pours 200 cm^3 of hot water into the metal container. She places the thermometer in the hot water in the container. She records the temperature at time t = 0. She immediately starts a stop-watch.
She records the temperature in Table 2.1 at 30 s intervals until she has seven sets of readings.

Complete the column headings in Table 2.1. [1]

Table 2.1

t/	θ/
0	92
0.5	86
1.0	82
1.5	79
2.0	77
2.5	75
3.0	74

© UCLES 2024

(c) Plot a graph of temperature θ (y-axis) against time t (x-axis). Label your axes appropriately.

You do not need to start the y-axis at 0. Draw the best-fit curve.

View solution



[4]

(d) A student states that the average rate of cooling of the water decreases as the temperature of the water approaches room temperature.

State whether your graph line supports this suggestion. Explain your answer by reference to the shape of the graph line.

statement .....

.....

explanation .....

.....

.....

[2]

(e) Explain why it is good practice to read the thermometer scale at right angles to the reading.

.....

..... [1]

(f) Draw a measuring cylinder containing water. On your diagram show the line of sight you use to obtain an accurate reading of the volume of water.

View solution

[2]

[Total: 11]

© UCLES 2024

BLANK PAGE

3 A student investigates the image produced by a lens.

Fig. 3.1 shows the set up.

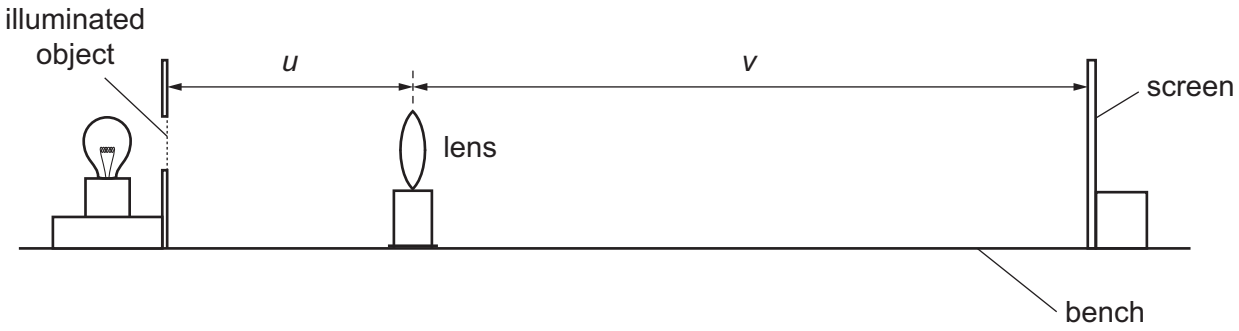

Fig. 3.1

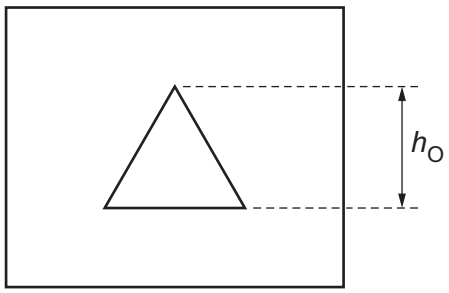

Fig. 3.2

(a) On Fig. 3.2, measure the height h_O of the illuminated object.

View solution

h_O = ... cm [1]

(b) The student places the lens at a distance u = 25.0 cm from the illuminated object.

View solution

He moves the screen until a clearly focused image is formed on the screen.

He measures the distance v between the centre of the lens and the screen.

v = 41.2 cm

Describe **two** techniques that you use to obtain a clearly focused image.

1 .....

.....

2 .....

.....

[2]

(c) Calculate the focal length f of the lens using the equation $f = \frac{uv}{(u + v)}$.

View solution

Give your answer to three significant figures and include the unit.

f = ... [3]

(d) The object is brighter than the image. Complete the sentences to describe **two** other ways in which the image seen on the screen is different from the object.

1 The image is .....

2 The image is .....

[2]

(e) The student repeats the steps in **(b)** using a distance u = 30.0 cm.

v = 29.8 cm

Calculate the focal length f of the lens using the equation $f = \frac{uv}{(u + v)}$.

View solution

f = ... [1]

(f) State and explain whether your results for the focal length f are equal within the limits of experimental accuracy.

statement .....

.....

explanation .....

.....

.....

[2]

[Total: 11]

View solution

4 A student investigates the current required to melt different fuse wires.

View solution

Fig. 4.1 shows part of the circuit the student uses.

The following equipment is also available:

- fuse wires with a selection of different diameters and metals (all with the same length)
- metre ruler
- ammeter
- variable resistor

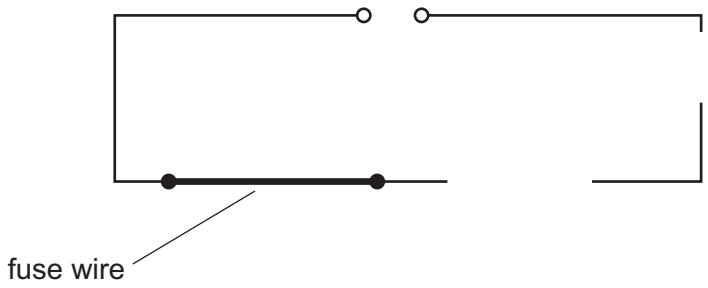

Fig. 4.1

Plan an experiment to investigate how **one** factor affects the current required to melt a fuse wire.

You do **not** need to write about safety precautions.

In your plan:

- state the variable that you choose to investigate
- complete the circuit diagram on Fig. 4.1
- explain briefly how to do the investigation
- state a key variable to keep constant
- draw a table, or tables, with column headings, to display the readings (you are **not** required to enter any readings in the table)
- explain how to use your results to reach a conclusion.

© UCLES 2024

.....

.....

.....

BLANK PAGE

Permission to reproduce items where third-party owned material protected by copyright is included has been sought and cleared where possible. Every reasonable effort has been made by the publisher (UCLES) to trace copyright holders, but if any items requiring clearance have unwittingly been included, the publisher will be pleased to make amends at the earliest possible opportunity.

To avoid the issue of disclosure of answer-related information to candidates, all copyright acknowledgements are reproduced online in the Cambridge Assessment International Education Copyright Acknowledgements Booklet. This is produced for each series of examinations and is freely available to download at www.cambridgeinternational.org after the live examination series.

Cambridge Assessment International Education is part of Cambridge Assessment. Cambridge Assessment is the brand name of the University of Cambridge Local Examinations Syndicate (UCLES), which is a department of the University of Cambridge.

© UCLES 2024