Cambridge Assessment International Education

Cambridge IGCSE™

CANDIDATE NAME									
CENTRE NUMBER						CANDIDATE NUMBER				

PHYSICS **0625/63**

Paper 6 Alternative to Practical **October/November 2024**

1 hour

You must answer on the question paper.

No additional materials are needed.

INSTRUCTIONS

- Answer **all** questions.
- Use a black or dark blue pen. You may use an HB pencil for any diagrams or graphs.
- Write your name, centre number and candidate number in the boxes at the top of the page.
- Write your answer to each question in the space provided.
- Do **not** use an erasable pen or correction fluid.
- Do **not** write on any bar codes.
- You may use a calculator.
- You should show all your working and use appropriate units.

INFORMATION

- The total mark for this paper is 40.
- The number of marks for each question or part question is shown in brackets [ ].

This document has **16** pages. Any blank pages are indicated.

© UCLES 2024

1 A student investigates the cooling of water in different sized beakers.

He uses the apparatus shown in Fig. 1.1.
Beaker A and beaker B have graduations as shown in Fig. 1.1.

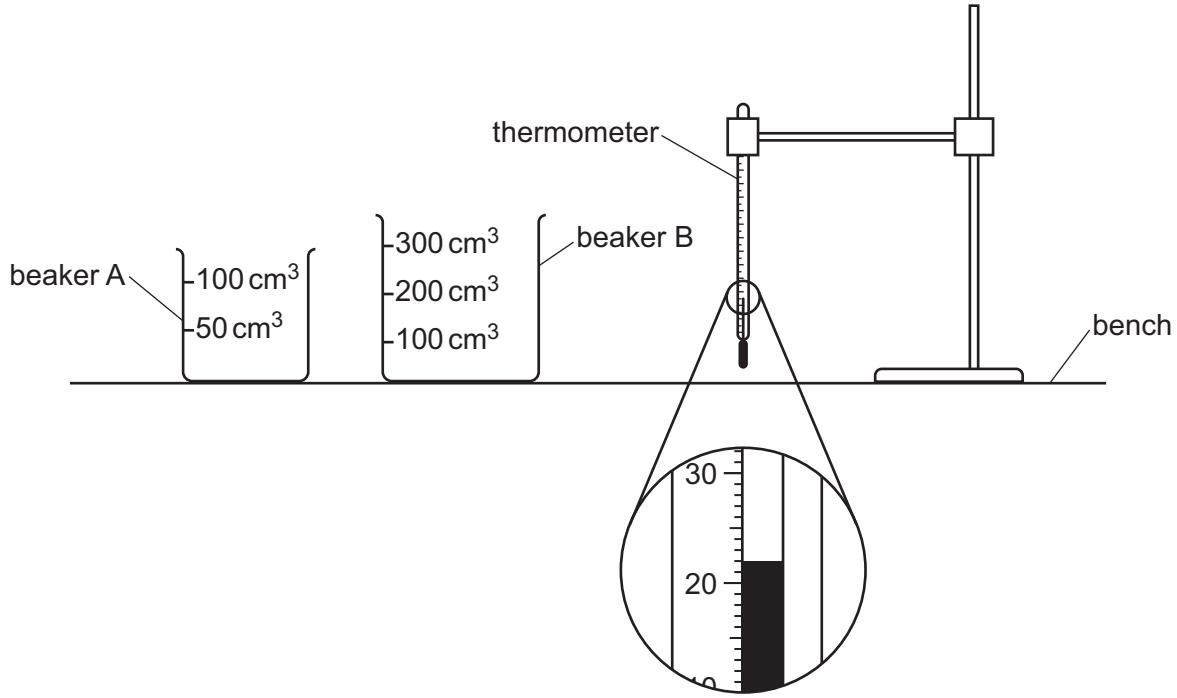

Fig. 1.1

(a) (i) Record room temperature θ_R shown on the thermometer in Fig. 1.1.

View solution

θ_R = ... °C [1]

(ii) Describe **one** technique to use so that the temperature reading is as accurate as possible in this experiment.

.....

..... [1]

View solution

(b) The student pours an estimated volume of 75 cm^3 of hot water into beaker A. He uses the scale on the beaker as a guide.

He puts the thermometer into the water in beaker A and records, in Table 1.1, the temperature θ at time t = 0.

View solution

He records, in Table 1.1, the temperature of the water in beaker A every 30 s.

The student repeats the procedure for beaker B.

His readings are shown in Table 1.1.

Suggest **one** possible source of inaccuracy in the procedure, even if it is carried out carefully.

.....

..... [1]

Table 1.1

	beaker A	beaker B
t/s	θ/°C	θ/°C
0	82.5	80.0
30	80.0	75.0
60	78.0	72.0
90	76.5	69.5
120	75.0	67.0
150	74.0	65.0
180	73.0	63.5

(c) Write a conclusion describing the effect of changing the size of the beaker on the rate of cooling of the hot water.
Justify your answer by reference to values from the results.

View solution

.....

.....

.....

..... [2]

© UCLES 2024

(d) Students in other schools do the same experiment **using identical apparatus**.

State **one** variable that they need to control in order to obtain readings as close as possible to the readings in Table 1.1.

.....

..... [1]

(e) Calculate the average cooling rate x for beaker B.
Use the readings **for beaker B** in Table 1.1 and the equation

View solution

$$x = \frac{\theta_0 - \theta_{180}}{T}$$

where T = 180 s and θ_0 and θ_{180} are the temperatures of the water in beaker B at t = 0 and t = 180 s.

Include the unit for the cooling rate.

x = ... [2]

(f) **(i)** Another student thinks that more thermal energy is lost from the surface of the water in beaker B than from the sides of beaker B.
Suggest an additional experiment that she can do with beaker B to test her idea.

View solution

.....

..... [1]

(ii) Suggest how the cooling rate of the water in beaker B in this additional experiment compares with the value of x in **(e)** if her idea is correct.

.....

.....

..... [2]

[Total: 11]

View solution

BLANK PAGE

2 A student determines the resistance of a resistor.

She uses the apparatus shown in Fig. 2.1.

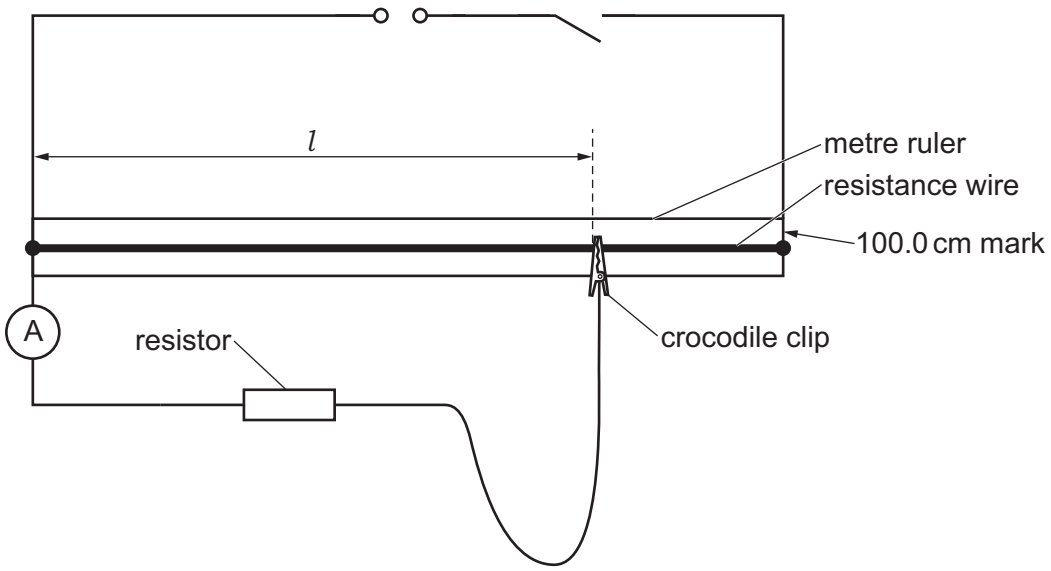

Fig. 2.1

View solution

(a) On Fig. 2.1, draw a voltmeter connected to measure the potential difference (p.d.) across the resistor. [1]

(b) The student connects the crocodile clip to the resistance wire at the 100.0 cm mark on the metre ruler and measures the potential difference V_0 across the resistor.
The voltmeter is shown in Fig. 2.2.

View solution

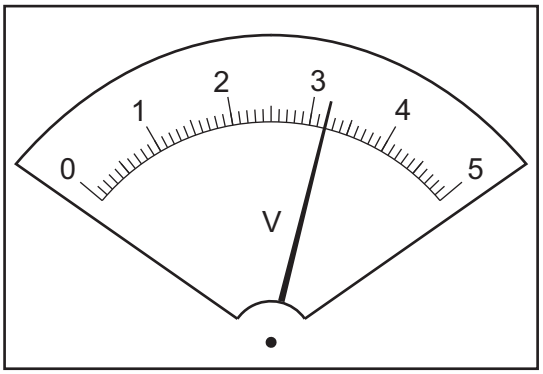

Fig. 2.2

Read and record the value of V_0 shown on the voltmeter in Fig. 2.2.

V_0 = ...V [1]

© UCLES 2024

(c) The student moves the crocodile clip to a length of resistance wire l = 20.0 cm.

Read and record in Table 2.1, the current for l = 20.0 cm, shown on the ammeter in Fig. 2.3.

[1]

View solution

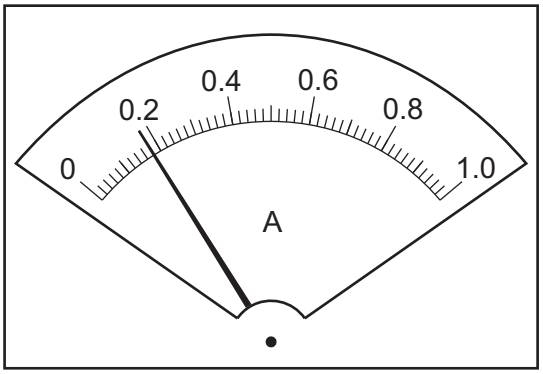

Fig. 2.3

(d) The student measures the current I for lengths of resistance wire l = 30.0 cm, l = 40.0 cm, l = 50.0 cm and l = 60.0 cm.
Her readings are shown in Table 2.1.

View solution

Table 2.1

l/cm	I/A
20.0	
30.0	0.22
40.0	0.30
50.0	0.39
60.0	0.42

© UCLES 2024

Plot a graph of l/cm (*y*-axis) against I/A (*x*-axis).

Draw a best-fit straight line. You do **not** need to start the axes at the origin (0,0).

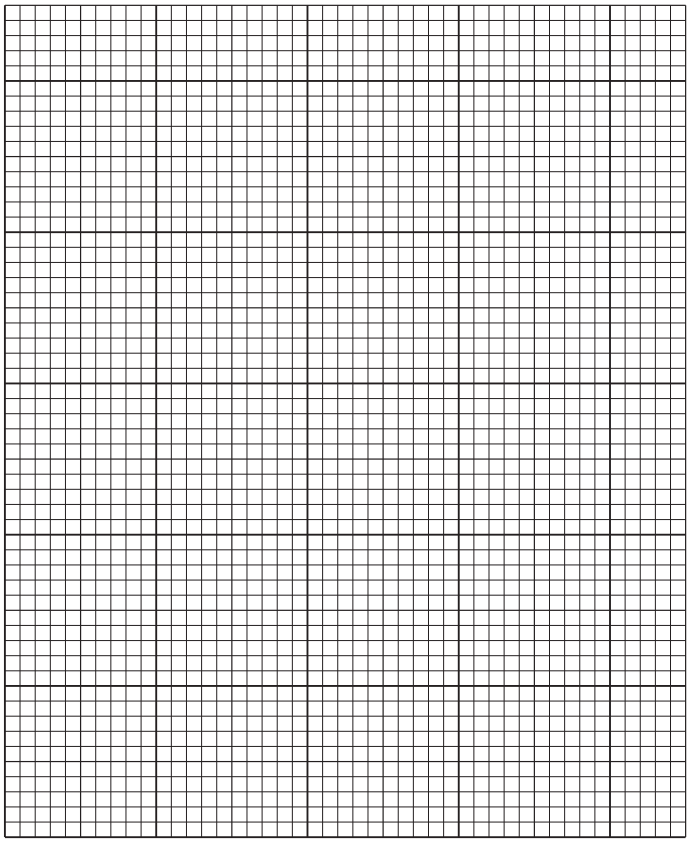

[4]

(e) (i) Determine the gradient *G* of the graph. Show clearly on the graph how you obtained the necessary information.

View solution

G = ... [1]

(ii) Calculate the resistance *R* of the resistor.
Use your value of V_0 from **(b)** and the equation:

View solution

$$R = \frac{G \times V_0}{100k} \text{ where } k = 1.0 \text{ A}$$

R = ... Ω [1]

(f) Suggest **one** practical reason why other students might not obtain the same result as this student, even if they do the experiment carefully.

.....

..... [1]

(g) The resistance wire can become very hot during this type of experiment.
Suggest **one** change to the apparatus that prevents this.

View solution

.....

..... [1]

[Total: 11]

3 A student investigates the refraction of light by a transparent block.
He determines a quantity known as the refractive index of the material of the block.

The student's ray-trace sheet is shown full-size in Fig. 3.1.

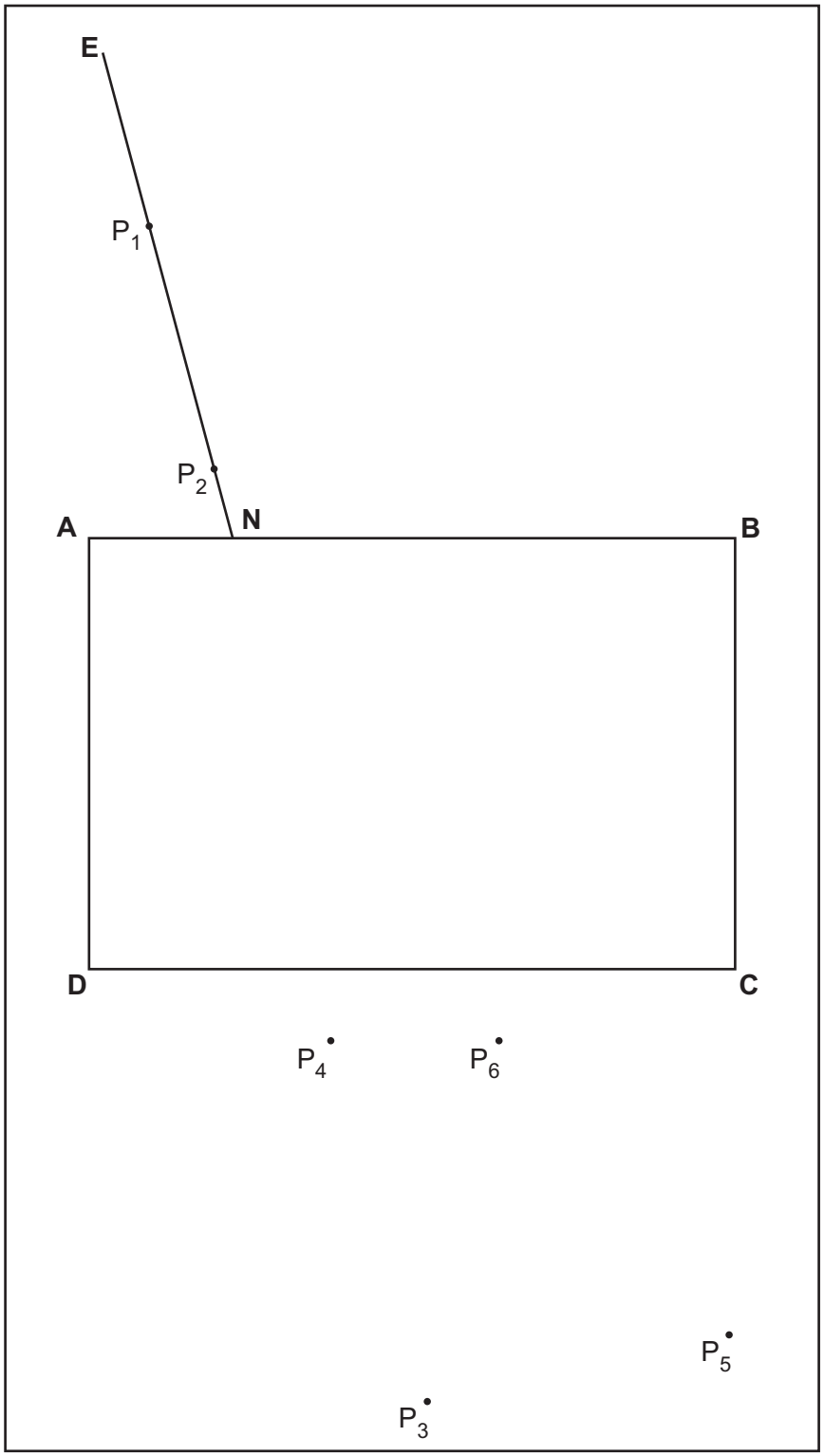

Fig. 3.1

(a) The student places a transparent block **ABCD** near the centre of the ray-trace sheet as indicated in Fig. 3.1.

(i) Draw a normal to point **N**, extending above **AB**. Label the upper end of the normal with the letter **L**.
Extend the normal downwards until it crosses line **CD**. Label the point at which it crosses **CD** with the letter **F**.

View solution [1]

(ii) The student draws line **EN** as shown in Fig. 3.1.
On Fig. 3.1, measure the acute angle θ_1 between the lines **LN** and **EN**.
(An acute angle is always less than 90°.)

View solution

θ_1 = ... [1]

(b) The student places two pins P_1 and P_2 on line **EN** as shown in Fig. 3.1.

View solution

(i) Measure distance *d* between pins P_1 and P_2.

d = ... [1]

(ii) Suggest whether the two pins are a suitable distance apart for accurate ray tracing.
Explain your answer.

View solution

statement .....

explanation .....

.....

[1]

(c) The student views the images of P_1 and P_2 through the block.
He places two pins P_3 and P_4 so that pins P_3 and P_4 and the images of P_1 and P_2 all appear exactly one behind the other.

Draw a straight line through P_3 and P_4. Extend this line to cross **NF**.

View solution

Label the point at which this line meets **NF** with the letter **G**.
Label the point at which this line crosses **CD** with the letter **H**.

Join points **H** and **N** with a straight line.

[1]

© UCLES 2024

(d) **(i)** Measure the length *a* of line **HN**.

a = ... cm

Measure the length *b* of line **HG**.

b = ... cm

[1]

(ii) Calculate a value *n* for the refractive index, using the equation $n = \frac{a}{b}$.

View solution

n = ... [1]

(e) The student repeats the above procedure for an angle $\theta_2 = 40°$.
He places two pins P_5 and P_6 so that pins P_5 and P_6 and the images of P_1 and P_2 all appear exactly one behind the other.

View solution

Draw a line through pins P_5 and P_6. Extend the line until it meets **GH**.

Label the point at which this line meets **GH** with the letter **K**.
Label the point at which this line crosses **CD** with the letter **R**.

(i) Measure the angle α, where α is the acute angle between lines **RK** and **GH**.

α = ... [1]

(ii) Another student suggests that angle α should be equal to the difference between angle θ_2 from **(e)(i)** and angle θ_1 from **(a)(ii)**.
State whether your results support this suggestion. Justify your answer by reference to values from your results.

View solution

statement .....

justification .....

.....

[2]

(f) Suggest **one** technique to use in this type of experiment to ensure results are accurate.

View solution

.....

..... [1]

[Total: 11]

BLANK PAGE

4 A student investigates the speed of a small trolley moving down a sloping ramp.

Plan an experiment which will enable her to compare the effect of different angles of slope on the average speed of the trolley between points on the ramp.

View solution

Average speed can be calculated from the equation:

$$\text{average speed} = \frac{\text{distance}}{\text{time}}$$

The apparatus available includes:

- a long ramp with a support that enables it to be set at different angles of slope
- a small trolley.

In your plan:

- list any additional apparatus needed
- explain briefly how to do the experiment, including how to take the measurements so that the average speed can be determined
- suggest a possible source of inaccuracy even if the method is carried out carefully
- state the key variables to keep constant
- draw a table, or tables, with column headings, to show how to display the readings (you are **not** required to enter any readings in the table)
- explain how to use the readings to reach a conclusion.

You may draw a diagram if it helps to explain your plan.

© UCLES 2024

.....

.....

.....

BLANK PAGE

Permission to reproduce items where third-party owned material protected by copyright is included has been sought and cleared where possible. Every reasonable effort has been made by the publisher (UCLES) to trace copyright holders, but if any items requiring clearance have unwittingly been included, the publisher will be pleased to make amends at the earliest possible opportunity.

To avoid the issue of disclosure of answer-related information to candidates, all copyright acknowledgements are reproduced online in the Cambridge Assessment International Education Copyright Acknowledgements Booklet. This is produced for each series of examinations and is freely available to download at www.cambridgeinternational.org after the live examination series.

Cambridge Assessment International Education is part of Cambridge Assessment. Cambridge Assessment is the brand name of the University of Cambridge Local Examinations Syndicate (UCLES), which is a department of the University of Cambridge.

© UCLES 2024