Cambridge Assessment International Education

Cambridge IGCSE™

PHYSICS **0625/23**

Paper 2 Multiple Choice (Extended) **October/November 2025**

45 minutes

You must answer on the multiple choice answer sheet.

You will need: Multiple choice answer sheet
Soft clean eraser
Soft pencil (type B or HB is recommended)

INSTRUCTIONS

- There are **forty** questions on this paper. Answer **all** questions.
- For each question there are four possible answers **A**, **B**, **C** and **D**. Choose the **one** you consider correct and record your choice in soft pencil on the multiple choice answer sheet.
- Follow the instructions on the multiple choice answer sheet.
- Write in soft pencil.
- Write your name, centre number and candidate number on the multiple choice answer sheet in the spaces provided unless this has been done for you.
- Do **not** use correction fluid.
- Do **not** write on any bar codes.
- You may use a calculator.
- Take the weight of 1.0 kg to be 9.8 N (acceleration of free fall = 9.8 m / s^2).

INFORMATION

- The total mark for this paper is 40.
- Each correct answer will score one mark.
- Any rough working should be done on this question paper.

IB25 11_0625_23/3RP
© UCLES 2025

1 When a pendulum passes a marker, a timer displays 1 minute 30 seconds.

View solution

The pendulum passes the marker 12 more times from the same direction.

On the final pass, the timer displays a time of 2 minutes 18 seconds.

What is the time period of oscillation of the pendulum?

A 4.0 s **B** 4.4 s **C** 7.5 s **D** 12 s

2 A car driver applies the brakes to bring a car to rest with a constant deceleration of $4.0\,m/s^2$ in a time of 8.0 s.

View solution

What is the average speed of the car during this time?

A 4.0 m/s **B** 8.0 m/s **C** 16 m/s **D** 32 m/s

3 An object is falling in a uniform gravitational field.

View solution

After a certain time, it reaches terminal velocity.

Which row is correct?

	velocity of object	acceleration of object
A	increases then decreases	positive then negative
B	increases then decreases	positive then zero
C	increases then constant	positive then negative
D	increases then constant	positive then zero

4 Which measuring instrument is used to compare masses?

View solution

A balance

B protractor

C stop-watch

D voltmeter

© UCLES 2025

5 Three different liquids are poured into a tall beaker. The liquids do **not** mix.

View solution

The liquid densities are shown in the table.

liquid	density / g/cm^3
P	1.8
Q	2.4
R	1.2

What is the correct order of the liquids from the top of the beaker to the bottom?

A P → Q → R **B** Q → P → R **C** Q → R → P **D** R → P → Q

6 A car is moving in a straight line on a level road. Its engine provides a forward force on the car. A second force of equal size acts on the car in the opposite direction.

View solution

Which statement describes what happens?

A The car changes direction.

B The car moves at a constant speed.

C The car slows down.

D The car speeds up.

7 Which beam is balanced? (Ignore the weight of the beam.)

View solution

A

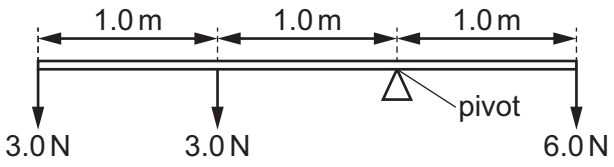

B

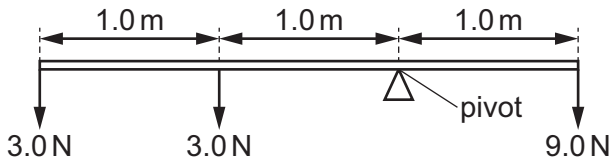

C

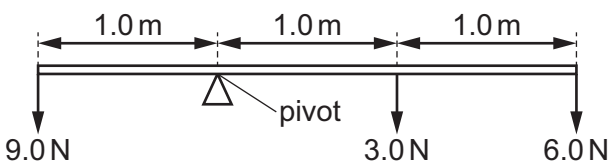

D

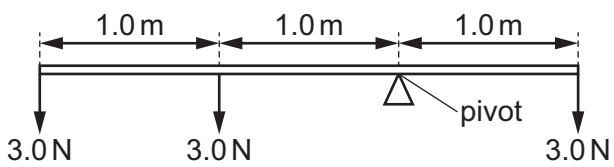

© UCLES 2025

8 A ball is at rest on the ground. A boy kicks the ball. The boy's boot is in contact with the ball for a time of 0.040 s.

View solution

The average force on the ball is 200 N. The ball leaves the boy's boot with a speed of 20 m / s.

Which row gives the impulse of the boot on the ball and the average acceleration of the ball during the time of 0.040 s?

	impulse on ball / Ns	average acceleration of ball / m/s^2
A	8	0.8
B	8	500
C	5000	0.8
D	5000	500

View solution

9 Which device transfers energy from a chemical energy store to a kinetic energy store?

A an a.c. generator

B a battery-powered torch

C a car engine

D a wind-up mechanical clock

View solution

10 For which energy resource is the Sun the main source?

A geothermal

B nuclear

C tidal

D wind

View solution

11 A football is inflated in a warm room and then taken outside where the temperature is much lower. The pressure and temperature inside the ball both decrease. The volume of the ball is unchanged.

Which row explains the decrease in pressure in terms of the movement of air particles?

	kinetic energy of air particles	frequency of collisions between air particles and inside surface of ball
A	decreased	decreased
B	decreased	unchanged
C	unchanged	decreased
D	unchanged	unchanged

© UCLES 2025

12 A fixed mass of gas has a volume of 25 cm^3. The pressure of the gas is 100 kPa.

The volume of the gas is slowly decreased by 15 cm^3 at constant temperature.

What is the change in pressure of the gas?

A 67 kPa **B** 150 kPa **C** 170 kPa **D** 250 kPa

View solution

13 The specific heat capacity of ice is 2000 J / kg °C.

Which thermal energy is required to raise the temperature of 100 g of ice by 5 °C?

A 40 J **B** 100 J **C** 1000 J **D** 4000 J

View solution

14 The diagram shows four labelled changes of state, P, Q, R and S, between solid, liquid and gas.

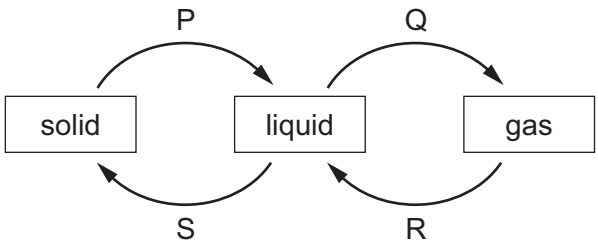

View solution

Which changes need an energy input?

A P and Q **B** Q and R **C** R and S **D** S and P

15 Which row about the movement of electrons and ions during conduction of thermal energy through a metal is correct?

	electrons	ions
A	move through metal	vibrate about fixed points
B	vibrate about fixed points	move through metal
C	vibrate about fixed points	vibrate about fixed points
D	move through metal	move through metal

View solution

16 A scientist measures the air temperature at different heights from the floor in a cave. The results are recorded in the table.

View solution

height / m	temperature / °C
0	10
10	11
20	13
30	14
40	16

Why does altering the height affect the temperature of the air?

A The particles in warm air have less energy than the particles in cool air.

B The particles in cool air are further apart than the particles in warm air.

C Warm air is less dense than cool air.

D Cool air rises above warm air.

17 Star X has a larger diameter than star Y but they both emit radiation with the same power.

View solution

Which statement is correct?

A The surface temperature of X is less than the surface temperature of Y.

B The surface temperatures of X and Y are the same.

C The surface temperature of X is greater than the surface temperature of Y.

D The surface areas of X and Y are the same.

18 When water waves pass through a gap, they diffract.

View solution

The diagrams show wavefronts approaching a gap.

In which diagram will the diffraction be least?

A

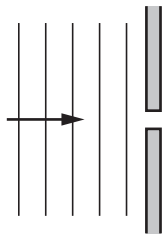

B

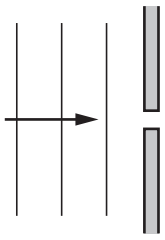

C

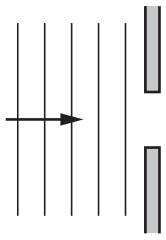

D

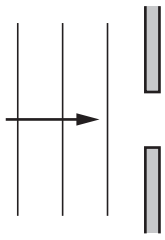

19 The diagram shows a scale drawing of the formation of an image by the reflection of light from a plane mirror.

View solution

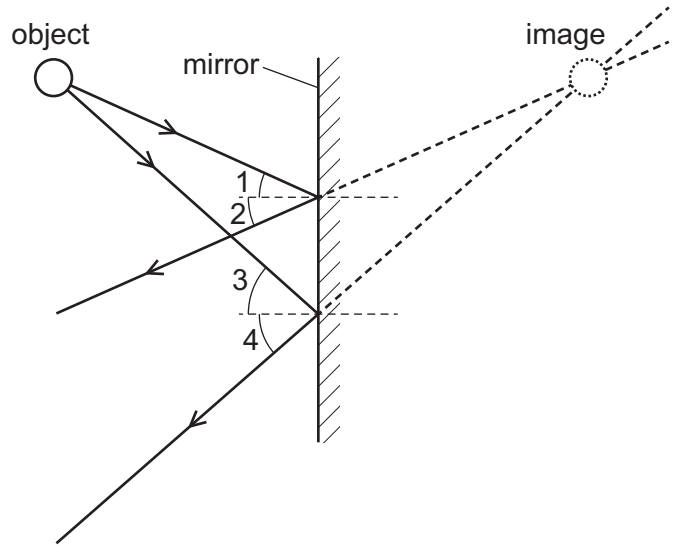

What are the relationships between the labelled angles?

A angle 1 = angle 2, and angle 3 = angle 4

B angle 1 = angle 3, and angle 2 = angle 4

C angle 1 = angle 4, and angle 3 = angle 2

D angle 1 = angle 2 = angle 3 = angle 4

View solution

20 The speed of light in a vacuum is 3.0×10^8 m/s.

The speed of light in glass is 2.2×10^8 m/s.

A light ray in a vacuum enters glass with an angle of incidence of 40°.

What is the angle of refraction within the glass?

A 28° **B** 29° **C** 55° **D** 61°

© UCLES 2025

21 The diagram shows a human eye that correctly focuses the light on the retina.

View solution

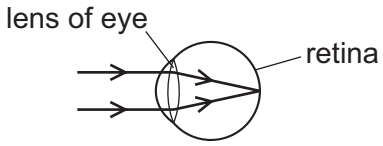

Which row shows a short-sighted eye and use of the correct lens to focus the image?

	ray diagram for short-sighted eye	corrected vision
A	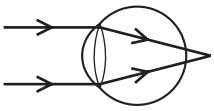	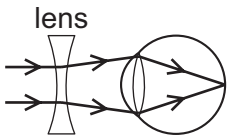
B	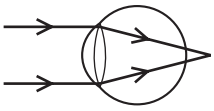	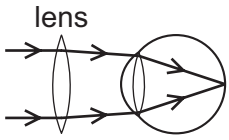
C	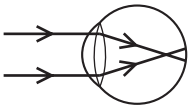	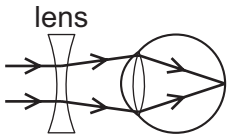
D	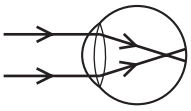	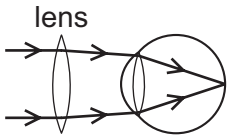

22 Visible light, X-rays and microwaves are all components of the electromagnetic spectrum.

View solution

Which statement about the waves is correct?

A In a vacuum, microwaves travel faster than visible light and have a shorter wavelength than visible light.

B In a vacuum, microwaves travel at the same speed as visible light and have a shorter wavelength than visible light.

C In a vacuum, X-rays travel faster than visible light and have a shorter wavelength than visible light.

D In a vacuum, X-rays travel at the same speed as visible light and have a shorter wavelength than visible light.

© UCLES 2025

23 Both the amplitude and the frequency of a sound wave decrease.

View solution

What happens to the sound that is heard?

A The sound is louder and has a higher pitch.

B The sound is louder and has a lower pitch.

C The sound is quieter and has a higher pitch.

D The sound is quieter and has a lower pitch.

24 The diagram shows the magnetic field due to a current in a solenoid.

View solution

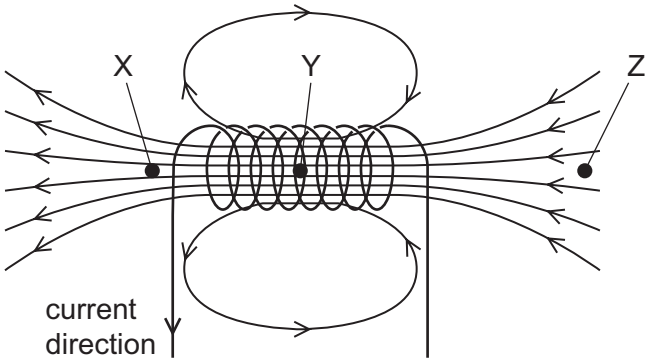

Which graph represents the strength of the magnetic field at positions X, Y and Z?

A

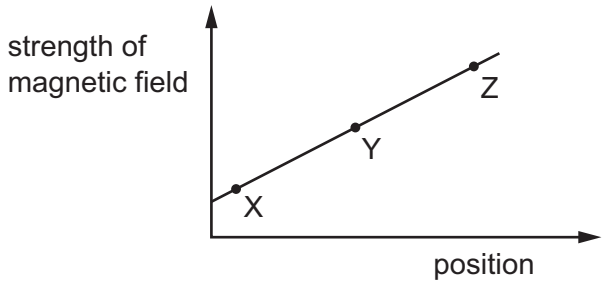

B

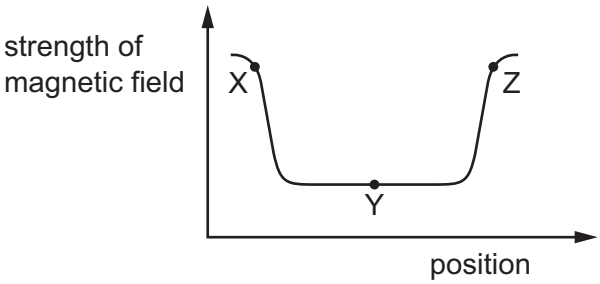

C

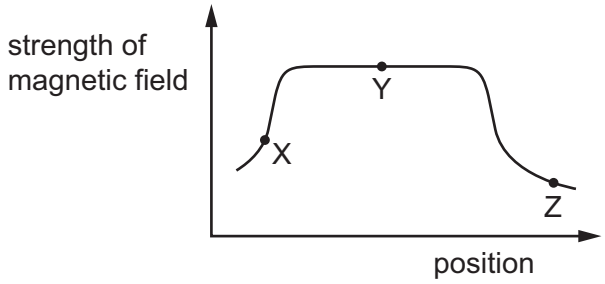

D

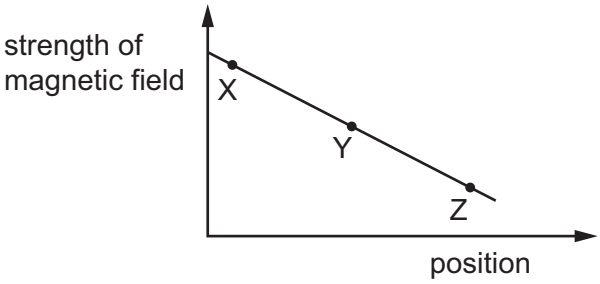

© UCLES 2025

25 Why does a plastic rod become negatively charged when it is rubbed with a cloth?

View solution

A The rod gains electrons.

B The rod gains protons.

C The rod loses electrons.

D The rod loses protons.

26 There is an electric current in a circuit with a battery. This question refers to the positive and negative terminals of the battery.

Which row correctly describes the directions of the conventional current and the electron flow in the circuit?

View solution

	direction of conventional current	direction of electron flow
A	from the negative to the positive terminal	from the negative to the positive terminal
B	from the negative to the positive terminal	from the positive to the negative terminal
C	from the positive to the negative terminal	from the negative to the positive terminal
D	from the positive to the negative terminal	from the positive to the negative terminal

27 Which electrical quantity is defined in terms of the energy supplied by a source in driving charge round a complete circuit?

View solution

A current

B electromotive force

C potential difference

D power

28 A torch has a simple circuit with a 3.0 V battery and a lamp. There is a 20 mA current in the lamp.

How much energy is transferred to the lamp in 5.0 minutes?

View solution

A 0.30 J **B** 18 J **C** 60 J **D** 0.30 kJ

© UCLES 2025

29 In which circuit does the lamp light?

View solution

A

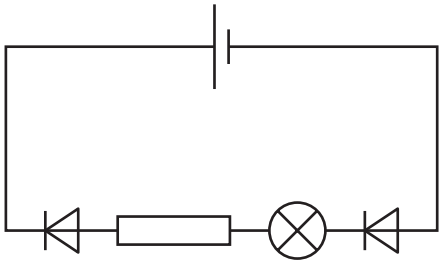

B

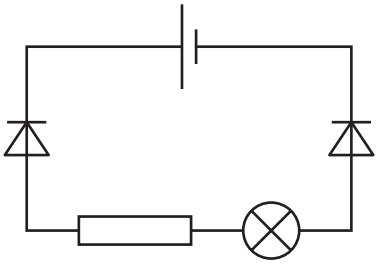

C

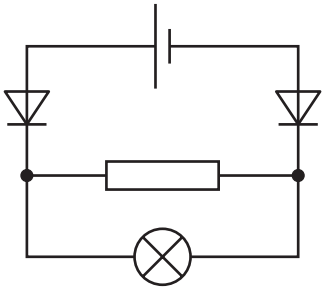

D

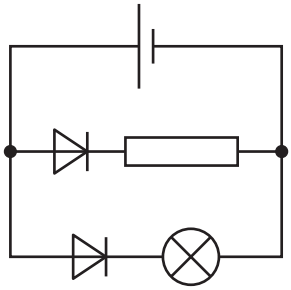

30 Which circuit shows possible correct values for the currents?

View solution

A

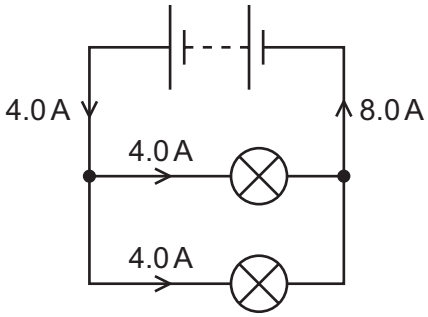

B

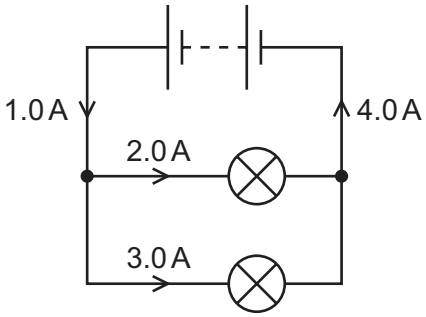

C

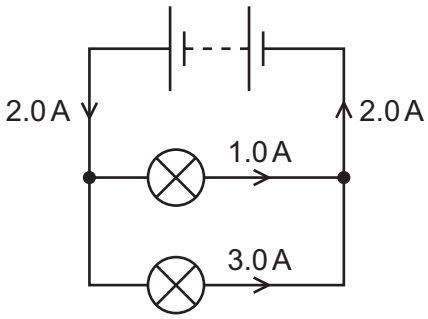

D

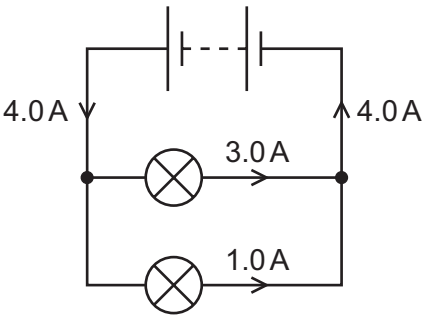

© UCLES 2025

31 The circuit diagrams show circuits that can control the potential difference (p.d.) across a lamp.

View solution

Which circuit allows the p.d. across the lamp to be varied from 0 V to 6.0 V?

A

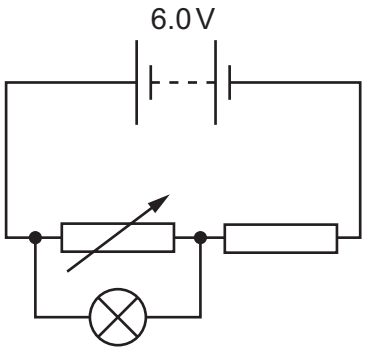

B

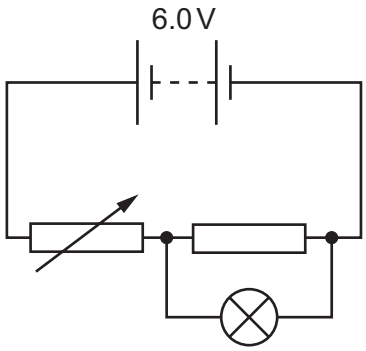

C

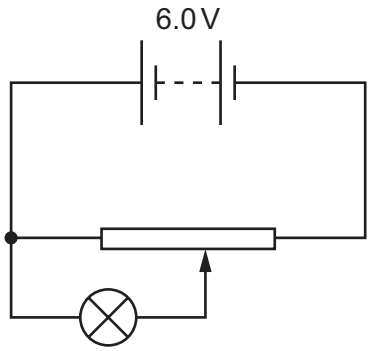

D

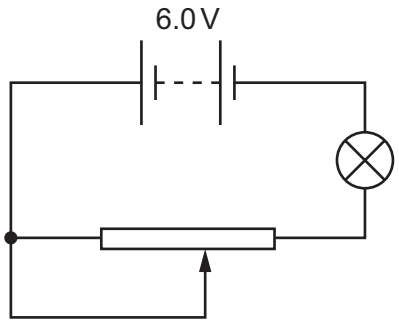

32 The diagram shows a wire between two magnetic poles. The wire is connected in a circuit with an ammeter.

View solution

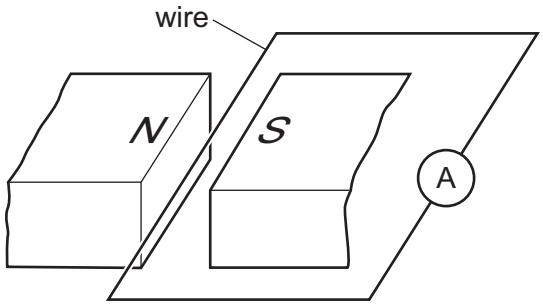

The wire is moved downwards, towards the bottom of the page. A current is induced in the wire.

In which direction is the force on the wire caused by this current?

A towards the bottom of the page

B towards the left of the page

C towards the right of the page

D towards the top of the page

© UCLES 2025

33 Some students set up an experiment to measure the count rate for a radioactive source.

First, they measure the radioactive background count rate in the laboratory by taking three measurements. Each measurement is taken over a 10-minute period.

View solution

The table shows their results.

number of counts in 10 minutes		
first measurement	second measurement	third measurement
170	164	185

Next, the students measure the counts near the radioactive source. This count rate is measured as 949 counts per minute.

What is the corrected count rate for the source?

A 932 counts per minute

B 776 counts per minute

C 430 counts per minute

D 78 counts per minute

© UCLES 2025

34 A radioactive source emits α-particles, β-particles and γ-rays into a vacuum where there is a magnetic field.

View solution

The magnetic field acts perpendicularly into the plane of the paper.

The paths J, K and L of the three types of radiation through the magnetic field are shown.

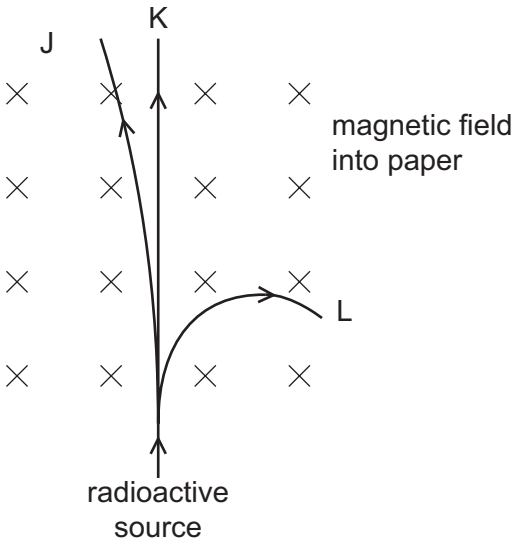

Which radiation follows path J, path K and path L?

	J	K	L
A	α-particles	β-particles	γ-rays
B	α-particles	γ-rays	β-particles
C	β-particles	α-particles	γ-rays
D	β-particles	γ-rays	α-particles

35 Radioactive decay is a change in an unstable nucleus which may result in emission of alpha-particles or beta-particles.

View solution

Which statement describes how these emissions happen?

A Alpha emission is a spontaneous and random process but beta emission is **not**.

B Alpha emission and beta emission are both spontaneous and random processes.

C Beta emission is a spontaneous and random process but alpha emission is **not**.

D Neither alpha emission nor beta emission are spontaneous and random processes.

© UCLES 2025

36 Which change occurs in the nucleus of a radioactive atom when a beta-particle is emitted?

View solution

A neutron → alpha-particle

B neutron → proton + electron

C proton → neutron

D proton → neutron + electron

37 A radioactive source that emits α-particles, β-particles and γ-radiation is stored safely in a container.

View solution

From which material should the container be made?

A alumimium

B copper

C paper

D lead

38 An artificial satellite orbits planet X at a distance $r = 7.0 \times 10^6$ m from the centre of planet X.

View solution

The average orbital speed v of the satellite is 3500 m / s.

What is the orbital period?

A 21 minutes

B 52 minutes

C 1 hour and 45 minutes

D 3 hours and 29 minutes

39 The table lists data about four different stars.

View solution

Which star is the Sun?

	main elements in the star	regions of electromagnetic spectrum where most energy is radiated by the star
A	helium, hydrogen, carbon, nitrogen, oxygen	blue, ultraviolet, X-ray
B	helium, hydrogen, carbon, nitrogen, magnesium	red, infrared
C	helium, hydrogen	infrared, ultraviolet, visible
D	helium, hydrogen	red, infrared

© UCLES 2025

40 What can be formed directly following a supernova?

View solution

A a nebula and a neutron star

B a nebula and a white dwarf

C a red supergiant and a neutron star

D a red supergiant and a protostar

Permission to reproduce items where third-party owned material protected by copyright is included has been sought and cleared where possible. Every reasonable effort has been made by the publisher (UCLES) to trace copyright holders, but if any items requiring clearance have unwittingly been included, the publisher will be pleased to make amends at the earliest possible opportunity.

To avoid the issue of disclosure of answer-related information to candidates, all copyright acknowledgements are reproduced online in the Cambridge Assessment International Education Copyright Acknowledgements Booklet. This is produced for each series of examinations and is freely available to download at www.cambridgeinternational.org after the live examination series.

Cambridge Assessment International Education is part of Cambridge Assessment. Cambridge Assessment is the brand name of the University of Cambridge Local Examinations Syndicate (UCLES), which is a department of the University of Cambridge.

© UCLES 2025