Cambridge Assessment International Education

Cambridge IGCSE™

CANDIDATE NAME									
CENTRE NUMBER						CANDIDATE NUMBER			

PHYSICS **0625/31**

Paper 3 Theory (Core) **October/November 2025**

1 hour 15 minutes

You must answer on the question paper.

No additional materials are needed.

INSTRUCTIONS

- Answer **all** questions.
- Use a black or dark blue pen. You may use an HB pencil for any diagrams or graphs.
- Write your name, centre number and candidate number in the boxes at the top of the page.
- Write your answer to each question in the space provided.
- Do **not** use an erasable pen or correction fluid.
- Do **not** write on any bar codes.
- You may use a calculator.
- You should show all your working and use appropriate units.
- Take the weight of 1.0 kg to be 9.8 N (acceleration of free fall = 9.8 m / s^2).

INFORMATION

- The total mark for this paper is 80.
- The number of marks for each question or part question is shown in brackets [ ].

This document has **16** pages. Any blank pages are indicated.

© UCLES 2025

BLANK PAGE

© UCLES 2025

1 Fig. 1.1 shows the distance-time graph for a cyclist travelling along a flat, straight road.

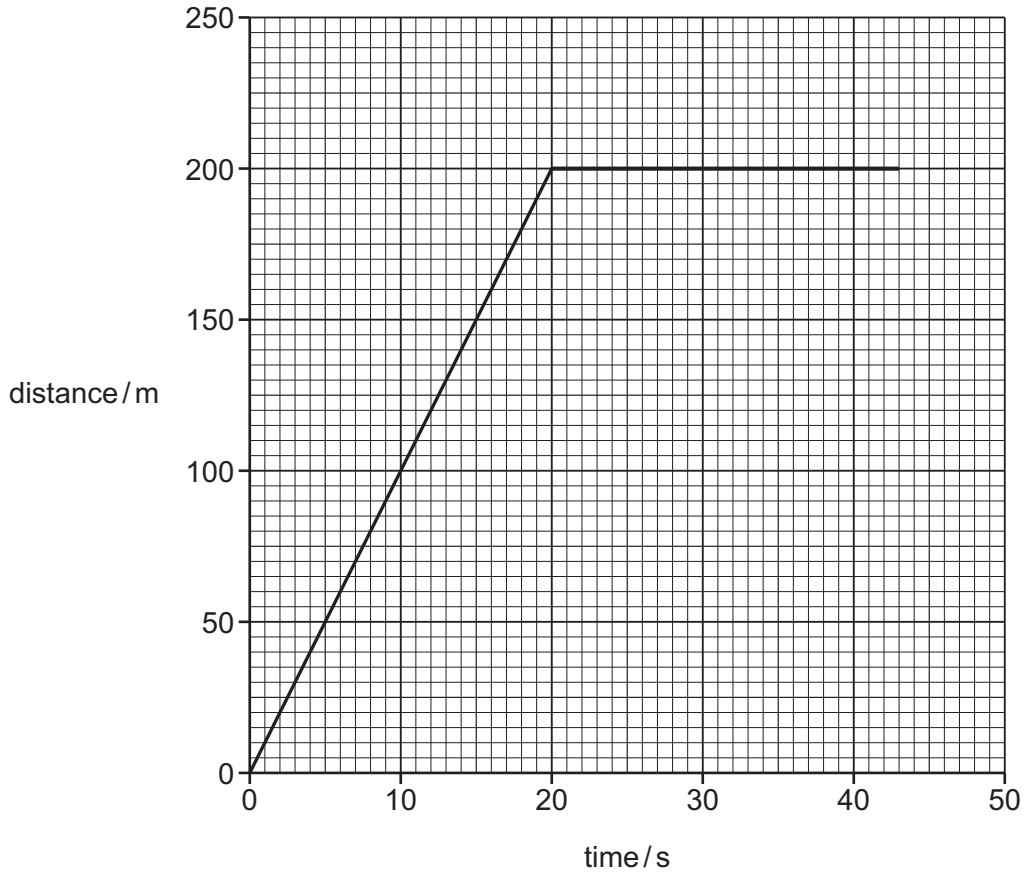

Fig. 1.1

(a) Calculate the speed of the cyclist between time = 0 and time = 10 s.

View solution

speed = ... m / s [3]

(b) Describe the motion of the cyclist:

View solution

(i) between time = 0 and time = 20 s

..... [1]

(ii) between time = 20 s and time = 40 s.

..... [1]

[Total: 5]

View solution

2 **(a)** Water is dripping slowly from a pipe.

(i) A student collects some drops in a measuring cylinder. Fig. 2.1 shows the water collected by the student.

View solution

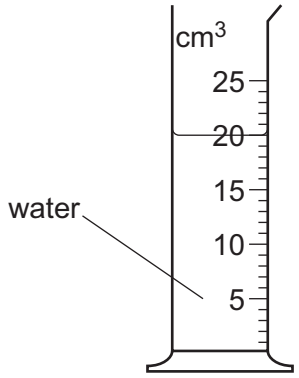

Fig. 2.1

Determine the volume of water in the measuring cylinder.

volume of water = ... cm^3 [1]

(ii) A teacher plans to measure the average volume of one drop of water. The teacher collects some drops of water as they fall into a different measuring cylinder. All the drops of water are the same volume.

View solution

Here is the teacher's data:

number of drops of water = 120

volume of water in the measuring cylinder = 24 cm^3

Calculate the volume of **one** drop of water.

volume of **one** drop of water = ... cm^3 [3]

© UCLES 2025

(b) A scientist places a piece of plastic in some water in a measuring cylinder. Fig. 2.2 shows the result.

View solution

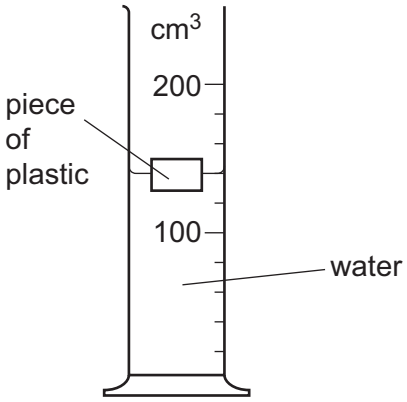

Fig. 2.2

Compare the density of the plastic with the density of the water in Fig. 2.2.

State the evidence that supports your answer.

density of the plastic is .....

evidence .....

[2]

[Total: 6]

3 A student stretches a spring by suspending it and attaching metal discs to it, as shown in Fig. 3.1.

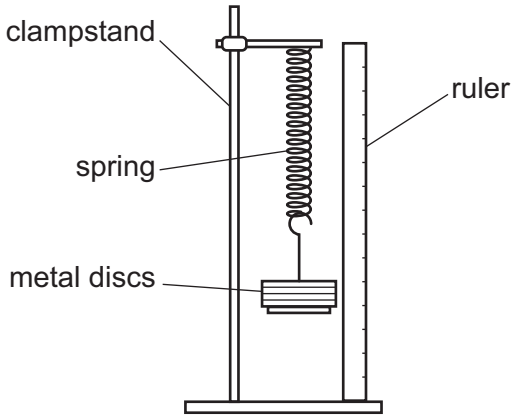

Fig. 3.1

View solution

(a) The mass of a metal disc is 0.25 kg.
Calculate the weight of the metal disc.

weight of metal disc = ... N [2]

View solution

(b) Fig. 3.2 shows the results from the student's experiment.

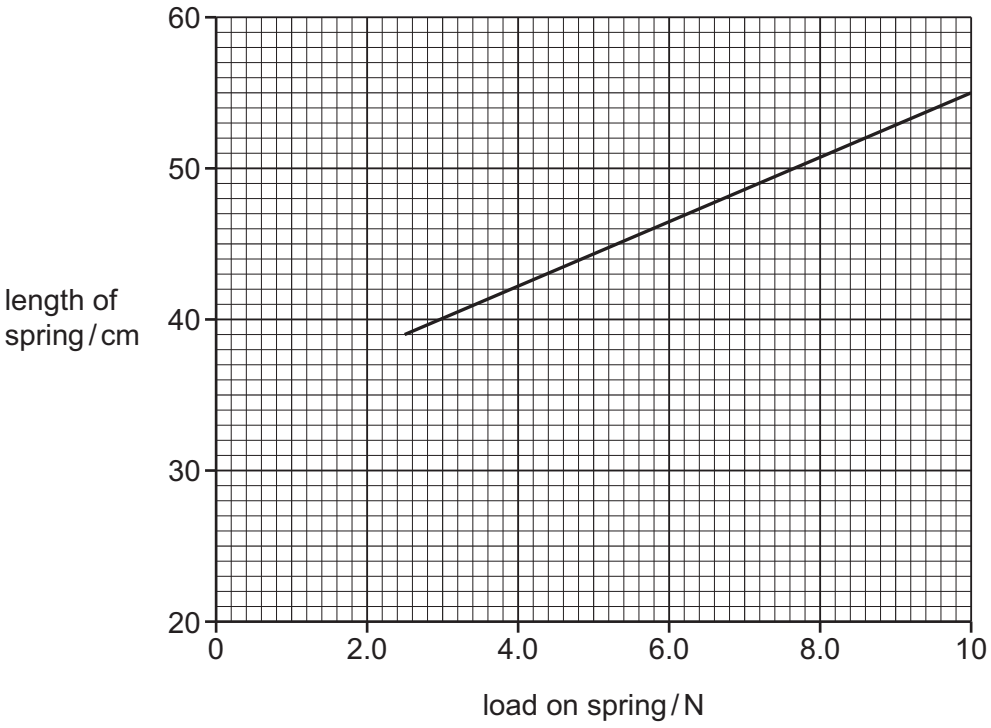

Fig. 3.2

(i) Determine the length of the spring when the load attached to the spring is 7.0 N.
Show your working on Fig. 3.2.

length of spring = ... cm [2]

© UCLES 2025

(ii) Determine the length of the spring when the load attached to the spring is zero. Show your working on Fig. 3.2.

View solution

length of spring when load is zero = ... cm [2]

[Total: 6]

4 Fig. 4.1 shows a student doing some repetitive 'step-up' exercises. In each 'step-up', the student steps up from the floor onto a box and then back down to the floor.

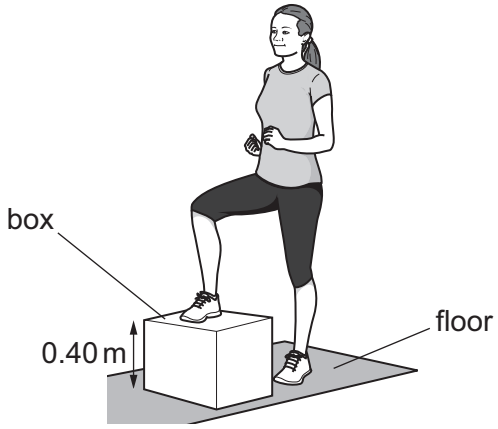

Fig. 4.1

View solution

(a) (i) The height of the box is 0.40 m. The weight of the student is 600 N.

Calculate the work done by the student in rising 0.40 m.

work done = ... J [3]

(ii) The chemical energy store in the student's body decreases as she does 'step-up' exercises.

State the energy stores that increase as a result of energy transfers from the student's chemical energy store.

.....

.....

..... [2]

View solution

(b) Another student transfers 3600 J of energy in a time of 30 s.

Calculate the student's power when transferring this energy.

student's power = ... W [3]

[Total: 8]

© UCLES 2025

5 Fig. 5.1 shows an empty metal cylinder.

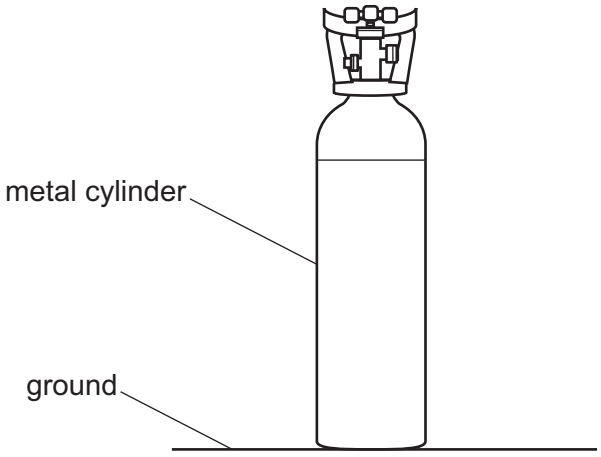

Fig. 5.1

View solution

(a) Describe the arrangement, separation and motion of the metal particles.

.....

.....

.....

.....

..... [3]

(b) The cylinder is filled with a gas. Describe how particles of the gas exert a pressure on the inside surface of the metal cylinder.

.....

.....

.....

.....

..... [3]

(c) The weight of the metal cylinder is 420 N. The area of the metal cylinder in contact with the ground is 300 cm^2.

View solution

Calculate the pressure on the ground due to the metal cylinder.

pressure = ... N/cm^2 [3]

[Total: 9]

© UCLES 2025

6 **(a)** Fig. 6.1 represents the main regions of the electromagnetic spectrum in order of increasing frequency.
Some of the regions have been named.

radio waves	microwaves	infrared	visible light	region 1	region 2	gamma rays

Fig. 6.1

View solution

(i) State the name of region 1 and the name of region 2.

region 1 .....

region 2 .....

[2]

(ii) Describe **one** use of gamma rays. View solution

..... [1]

(iii) Describe **one** harmful effect on people of excessive exposure to gamma rays. View solution

..... [1]

(b) The frequency of an electromagnetic wave is 2.0×10^6 Hz. The speed of the wave in a medium is 2.8×10^8 m/s.

Calculate the wavelength of the wave.

View solution

wavelength = ... m [3]

[Total: 7]

© UCLES 2025

7 **(a)** A student has six metal bars. The bars are all the same size. Four of the bars are magnets, one is a bar of unmagnetised steel and the other is a bar of copper metal.

The student arranges the bars in pairs with a small gap between them as shown in Fig. 7.1.

For each pair of bars in Fig. 7.1, state whether a force acts between the bars.
Choose from these phrases:

View solution

attractive force **no force** **repulsive force**

Each phrase may be used once, more than once or not at all.

For each pair of bars, write your answer on the dotted line.

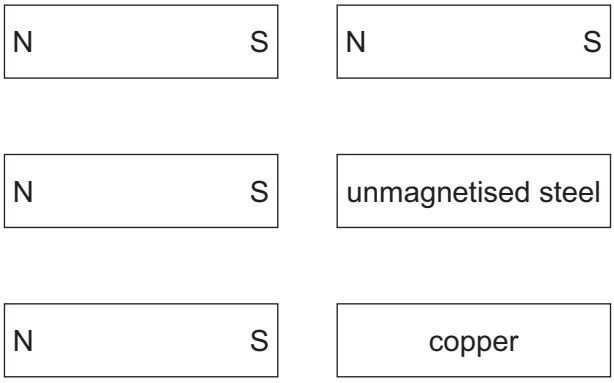

Fig. 7.1

[2]

(b) Describe what is meant by a magnetic field.

View solution

.....

..... [1]

(c) In another experiment, the student compares different electrically conducting and electrically insulating materials.

(i) State the name of **one** electrically conducting material and the name of **one** electrically insulating material.

electrically conducting material .....

electrically insulating material .....

[2]

(ii) Explain how electrical conducting materials allow a current to pass.

View solution

.....

..... [2]

[Total: 7]

© UCLES 2025

8 A television uses many electrical components.

(a) The potential difference (voltage) across a component is 72 V. The current in the component is 0.024 A.

Calculate the resistance of the component.

View solution

resistance = ... Ω [3]

(b) The television uses a transformer. The input voltage (V_p) to the transformer is 120 V. The number of turns (N_p) on the input coil is 560. The number of turns (N_s) on the output coil is 70.

Calculate the output voltage (V_s) of the transformer.

View solution

output voltage = ... V [3]

(c) The potential difference (voltage) across a resistor is 64 V. The current in the resistor is 2.2 mA.

Calculate the power of the resistor.

View solution

power = ... W [4]

(d) The energy used by the television in one hour is 0.14 kWh. The cost of one kWh of energy is 36 cents.

Calculate the cost of using the television for 6.0 hours.

View solution

cost for 6 hours = ... cents [3]

[Total: 13]

© UCLES 2025

9 A teacher connects the circuit shown in Fig. 9.1.

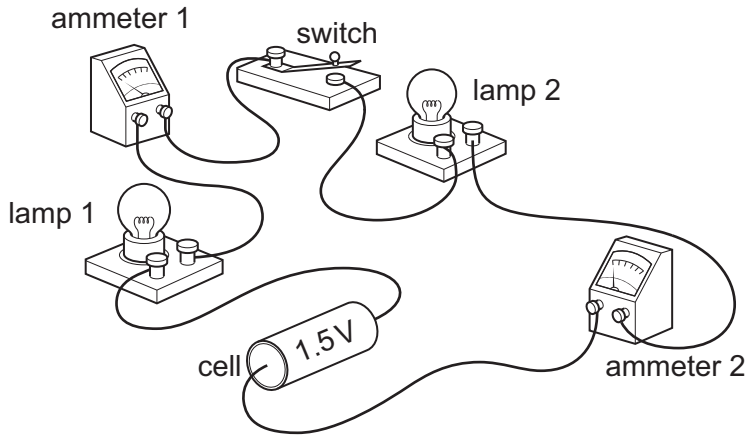

Fig. 9.1

(a) Give the name for the way the components are connected in this circuit.

View solution

..... [1]

(b) The resistance of each lamp is 8.0 Ω.

View solution

Calculate the combined resistance of lamp 1 and lamp 2.

combined resistance = ... Ω [2]

(c) The teacher draws a circuit diagram for the circuit in Fig. 9.1. The circuit diagram is not completed.
Fig. 9.2 shows the teacher's incomplete circuit diagram.

View solution

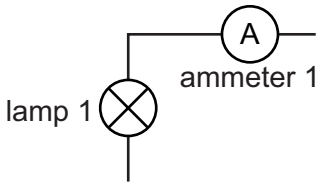

Fig. 9.2

Complete the circuit diagram by adding the symbols correctly connected. [3]

[Total: 6]

10 Radium is a radioactive element with the chemical symbol Ra. The proton number for radium is 88. Radium-223 is an isotope of radium that has a nucleon number of 223.

(a) Write the nuclide notation for radium-223.

View solution

[2]

(b) Determine the number of neutrons in one nucleus of radium-223.

View solution

number of neutrons = ... [1]

(c) The half-life of radium-223 is 11 days. A sample contains 32 mg of radium-223.

Calculate the time taken for the mass of radium-223 in the sample to decay from 32 mg to 4 mg.

View solution

number of days = ... [3]

[Total: 6]

© UCLES 2025

11 Mars is one of the four rocky planets nearest the Sun.

(a) State why the gravitational field strength at the surface of the Earth is greater than the gravitational field strength at the surface of Mars.

..... [1]

(b) State the names of the four gaseous planets **further** from the Sun than Mars. List the planets in order of increasing distance from the Sun.

View solution

1 .....

2 .....

3 .....

4 .....

increasing distance from the Sun

[3]

(c) A device on the surface of Mars sends a radio wave to the Earth. The distance from Mars to the Earth is 1.3×10^{11} m. The speed of the radio wave is 3.0×10^{8} m/s.

Calculate the time taken for the radio wave to travel from Mars to the Earth.

View solution

time taken = ... s [3]

[Total: 7]

© UCLES 2025

BLANK PAGE

Permission to reproduce items where third-party owned material protected by copyright is included has been sought and cleared where possible. Every reasonable effort has been made by the publisher (UCLES) to trace copyright holders, but if any items requiring clearance have unwittingly been included, the publisher will be pleased to make amends at the earliest possible opportunity.

To avoid the issue of disclosure of answer-related information to candidates, all copyright acknowledgements are reproduced online in the Cambridge Assessment International Education Copyright Acknowledgements Booklet. This is produced for each series of examinations and is freely available to download at www.cambridgeinternational.org after the live examination series.

Cambridge Assessment International Education is part of Cambridge Assessment. Cambridge Assessment is the brand name of the University of Cambridge Local Examinations Syndicate (UCLES), which is a department of the University of Cambridge.

© UCLES 2025