Cambridge Assessment International Education

Cambridge IGCSE™

CANDIDATE NAME									
CENTRE NUMBER						CANDIDATE NUMBER				

PHYSICS **0625/41**

Paper 4 Theory (Extended) **October/November 2025**

1 hour 15 minutes

You must answer on the question paper.

No additional materials are needed.

INSTRUCTIONS

- Answer **all** questions.
- Use a black or dark blue pen. You may use an HB pencil for any diagrams or graphs.
- Write your name, centre number and candidate number in the boxes at the top of the page.
- Write your answer to each question in the space provided.
- Do **not** use an erasable pen or correction fluid.
- Do **not** write on any bar codes.
- You may use a calculator.
- You should show all your working and use appropriate units.
- Take the weight of 1.0 kg to be 9.8 N (acceleration of free fall = 9.8 m / s^2).

INFORMATION

- The total mark for this paper is 80.
- The number of marks for each question or part question is shown in brackets [ ].

This document has **16** pages. Any blank pages are indicated.

© UCLES 2025

BLANK PAGE

© UCLES 2025

1 A train travels with a constant velocity of 56 m / s on a horizontal track. The mass of the train is 440 000 kg.

(a) State the difference between the velocity of the train and its speed.

View solution

.....

..... [1]

(b) Calculate the kinetic energy stored in the moving train.

View solution

kinetic energy = ... [2]

(c) **(i)** The train has a uniform deceleration of 1.2 m / s^2.

View solution

Calculate the constant braking force which brings the train to rest.

force = ... [2]

(ii) Calculate the distance travelled by the train as it comes to rest.

View solution

distance = ... [3]

[Total: 8]

© UCLES 2025

2 Table 2.1 contains information about the planet Mars.

Table 2.1

mass	6.4×10^{23} kg
gravitational field strength at surface	3.7 N / kg
average density	3900 kg / m^3

(a) Define gravitational field strength.

View solution

.....

..... [1]

(b) **(i)** An object has a weight of 42 N at the surface of the Earth.

Calculate the weight of the object at the surface of Mars.

View solution

weight = ... [2]

(ii) Calculate the volume of Mars.

View solution

volume = ... [2]

© UCLES 2025

(c) Fig. 2.1 shows a space buggy that is tested on Earth. The buggy is travelling at a constant speed in a straight line. The driving force on the buggy is 30 N.

View solution

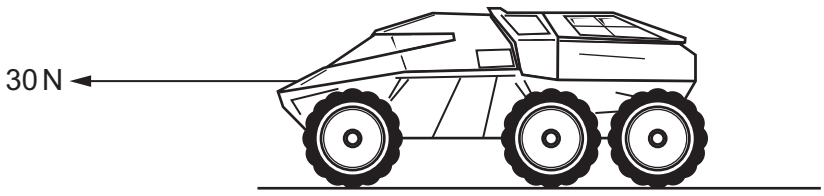

Fig. 2.1

(i) Draw and label **one** arrow on Fig. 2.1 to show the size and direction of the resistive forces on the buggy. [2]

(ii) Air resistance on Mars is less than air resistance on Earth.
The same driving force, 30 N, is exerted on the buggy on Mars.

View solution

1. State the effect this has on the resultant force on the buggy on Mars.

.....

2. State the relationship between resistive forces, driving force and resultant force.

.....
[1]

[Total: 8]

© UCLES 2025

3 Fig. 3.1 shows a simplified diagram of a solar cell.

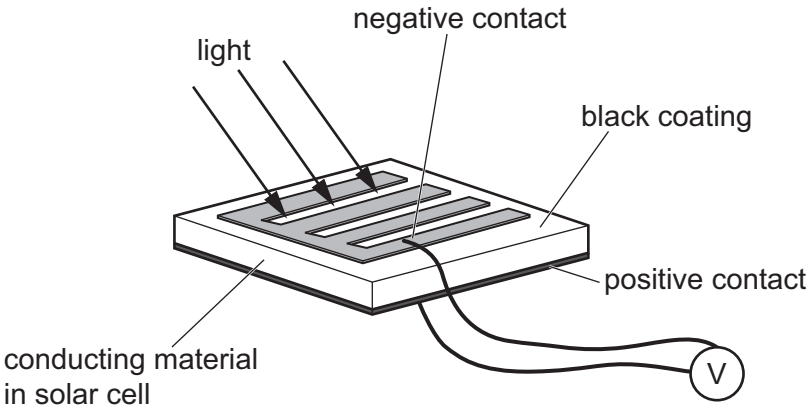

Fig. 3.1

(a) Describe the energy transfer in the solar cell.

View solution

.....

.....

[2]

(b) Suggest how the black coating allows the solar cell to transfer more energy.

View solution

.....

.....

.....

[1]

(c) 0.72 kW of light is incident on the solar cell in Fig. 3.1. The cell has an efficiency of 75%.

View solution

(i) Calculate the output power of the cell.

output power = ... [2]

(ii) State the meaning of the term kilowatt-hour (kWh).

View solution

.....

.....

.....

[1]

© UCLES 2025

(iii) Energy is produced by each solar cell for an average of 6 hours per day. A household uses approximately 7400 kWh of electrical energy per year.

Calculate the number of solar cells needed to produce energy for one household. Give your answer as a whole number of solar cells.

View solution

number of solar cells = ... [3]

[Total: 9]

4 **(a)** A 12 V, 50 W immersion heater is used to heat 0.15 kg of water in a beaker. The water is initially at a room temperature of 20 °C. The specific heat capacity of water is 4200 J/(kg °C).

Calculate the energy supplied to raise the temperature of the water from 20 °C to 58 °C.

View solution

energy = ... [3]

(b) The immersion heater is removed from the beaker.

One metal rod and one plastic rod are placed in the beaker of hot water as shown in Fig. 4.1. The rods are at room temperature (20 °C) before they are placed into the beaker.

View solution

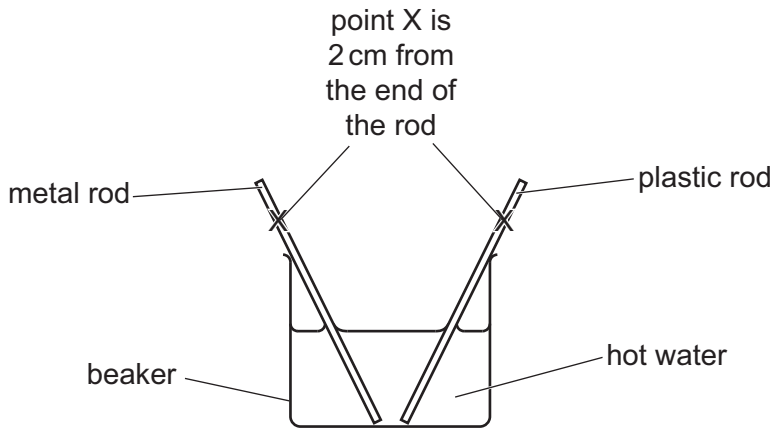

Fig. 4.1

Describe how the temperature of point X on each rod changes after the rods are placed in the beaker. Explain your answer.

.....

.....

.....

.....

..... [4]

[Total: 7]

5 A dolphin communicates with other dolphins underwater by emitting sounds in the range 7–15 kHz.

(a) State the value of the speed of sound in air and state how the speed of sound in water differs from the speed of sound in air.

View solution

speed of sound in air ..... m/s

speed of sound in water .....

[1]

(b) State and explain if humans with normal hearing can hear all the sounds emitted by the dolphin.

View solution

statement .....

explanation .....

.....

[2]

(c) Complete Table 5.1 to describe differences in loudness and pitch of two different dolphin sounds.

View solution

Table 5.1

Frequency / kHz	amplitude	loudness	pitch
14	large		
8	small		

[2]

(d) Complete the sentences to describe how sound is transmitted through water.

View solution

Sound waves are made of vibrating ..... which produce compressions and rarefactions. A compression is a region of ..... and a rarefaction is a region of ..... . The sound waves travel ..... to the direction of the vibrations.

[3]

[Total: 8]

© UCLES 2025

6 Fig. 6.1 shows part of an optical fibre used in high-speed broadband communication.

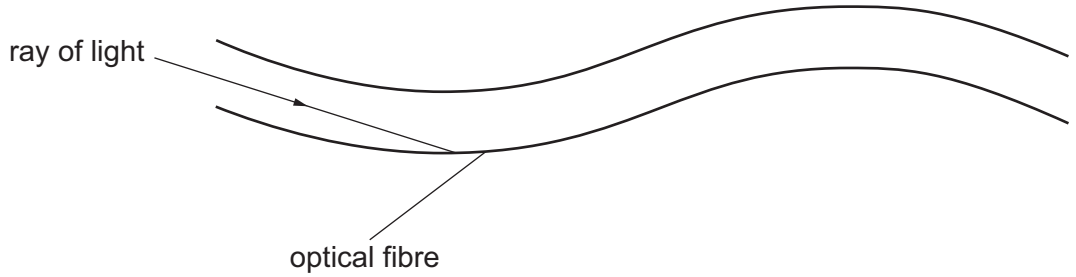

Fig. 6.1

View solution

(a) State **two** advantages of using optical fibres in high-speed data transmission compared to electrical signals sent on copper wires.

.....

..... [2]

(b) **(i)** The optical fibre is made of glass with a refractive index of 1.4.

View solution

Calculate the critical angle *c*.

c = ... [3]

(ii) State the meaning of critical angle.

View solution

.....

..... [1]

(iii) On Fig. 6.1, label the angle of incidence of the ray of light as it hits the wall of the glass fibre. Draw the continuation of the ray until it leaves the glass fibre. [2]

[Total: 8]

View solution

7 Fig. 7.1 shows a circuit containing a 6.0 V battery of cells and three identical resistors.

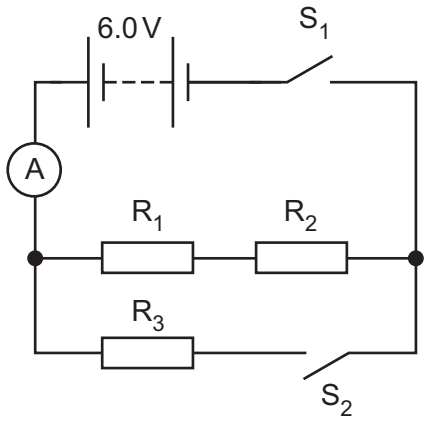

Fig. 7.1

(a) S_1 is closed and S_2 is open. The current in the ammeter is 0.080 A.

Calculate the resistance of R_1.

resistance = ... [2]

(b) S_1 and S_2 are both closed.

(i) Determine the reading on the ammeter. Show your working.

ammeter reading = ... [3]

(ii) Explain in terms of work done and potential difference why there is a larger heating effect in R_3 than in R_1.

.....

.....

..... [2]

[Total: 7]

8 Fig. 8.1 shows a solenoid.

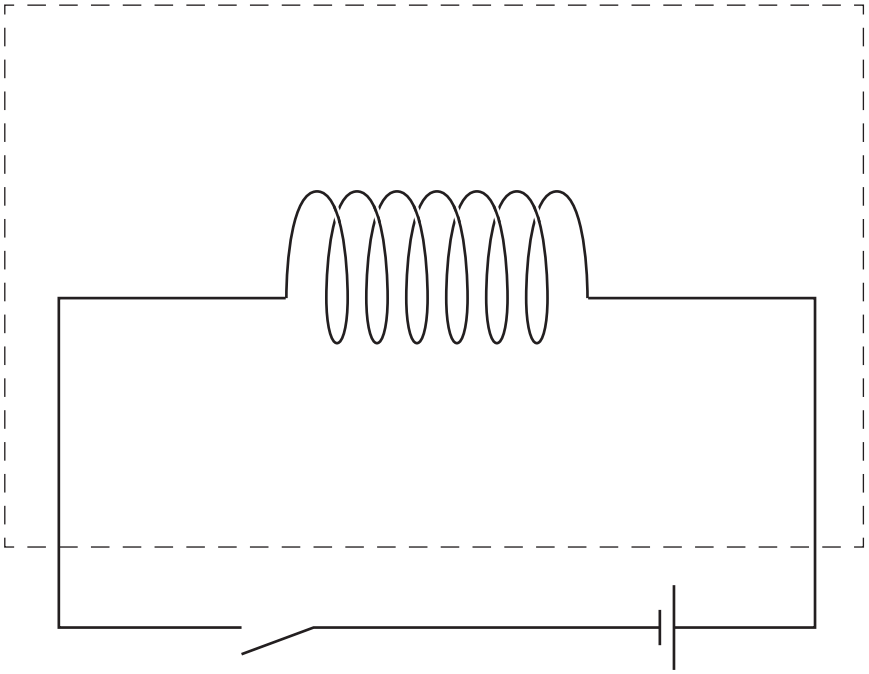

Fig. 8.1

View solution

(a) (i) Draw on Fig. 8.1 **four** complete magnetic field lines that show the pattern and direction of the magnetic field inside and outside the solenoid. [4]

(ii) Mark a point inside the box in Fig. 8.1 where the magnetic field is strong. Label this point B.

View solution

Explain how the diagram shows that the magnetic field is strong at B.

explanation .....

..... [1]

© UCLES 2025

(b) Fig. 8.2 shows a solenoid in an electric circuit for a bell.

View solution

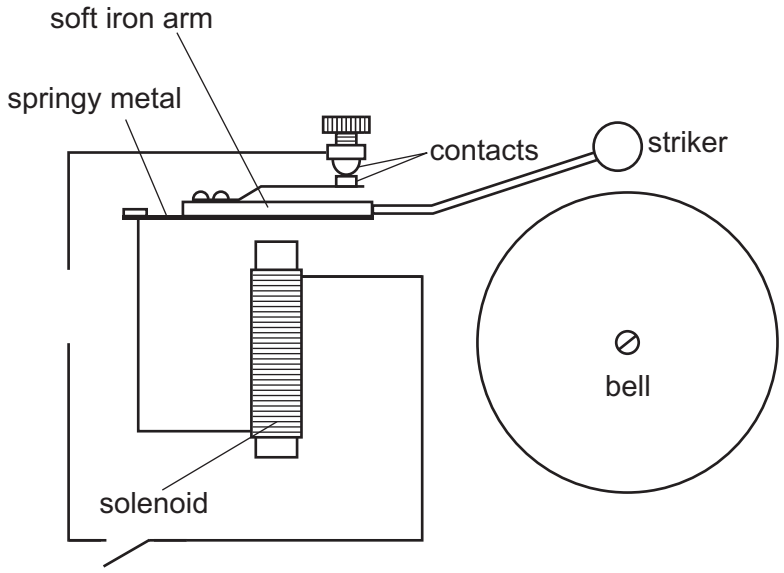

Fig. 8.2

(i) Complete the circuit in Fig. 8.2 with the symbol for a direct current (d.c.) power supply. [1]

(ii) Explain why the soft iron arm pivots, making the striker hit the bell when the switch is closed.

.....

.....

.....

..... [2]

(iii) Explain why the arm pivots back to its original position after the striker hits the bell.

.....

.....

.....

..... [2]

[Total: 10]

© UCLES 2025

9 **(a)** Describe the structure of an atom of helium-4, $^{4}_{2}He$.

.....

.....

.....

..... [3]

(b) The Sun is a medium-sized star powered by nuclear fusion reactions which release energy.

(i) State what happens during nuclear fusion reactions which form helium.

View solution

.....

.....

..... [2]

(ii) State **two** regions of the electromagnetic spectrum by which the Sun radiates most of its energy.

..... [2]

(c) Describe what happens to a star when most of the fuel in its centre has been converted to helium.

.....

.....

..... [2]

[Total: 9]

View solution

10 Fig. 10.1 shows the orbit of the Earth and the orbit of a comet around the Sun.

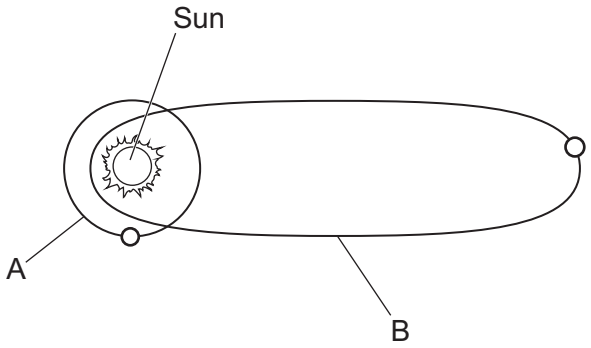

Fig. 10.1

(a) State which orbit, A or B, is the orbit of the comet.
Explain your answer.

View solution

orbit of comet is .....

explanation .....

.....

[1]

(b) Describe and explain how the motion of the comet changes as it orbits the Sun.

View solution

.....

.....

..... [2]

(c) At one position in its orbit, the comet is 6.6×10^{-6} light-years away from the Earth.

View solution

(i) State the meaning of light-year.

.....

..... [1]

(ii) Determine the distance in metres between the comet and the Earth.

View solution

distance = ... m [2]

[Total: 6]

© UCLES 2025

BLANK PAGE

Permission to reproduce items where third-party owned material protected by copyright is included has been sought and cleared where possible. Every reasonable effort has been made by the publisher (UCLES) to trace copyright holders, but if any items requiring clearance have unwittingly been included, the publisher will be pleased to make amends at the earliest possible opportunity.

To avoid the issue of disclosure of answer-related information to candidates, all copyright acknowledgements are reproduced online in the Cambridge Assessment International Education Copyright Acknowledgements Booklet. This is produced for each series of examinations and is freely available to download at www.cambridgeinternational.org after the live examination series.

Cambridge Assessment International Education is part of Cambridge Assessment. Cambridge Assessment is the brand name of the University of Cambridge Local Examinations Syndicate (UCLES), which is a department of the University of Cambridge.

© UCLES 2025