Cambridge Assessment International Education

# Cambridge IGCSE™

| | | | | | | | | | |
|---|---|---|---|---|---|---|---|---|---|
| CANDIDATE NAME | | | | | | | | | |
| CENTRE NUMBER | | | | | | CANDIDATE NUMBER | | | | |

**PHYSICS** **0625/43**

Paper 4 Theory (Extended) **October/November 2025**

**1 hour 15 minutes**

You must answer on the question paper.

No additional materials are needed.

**INSTRUCTIONS**

- Answer **all** questions.
- Use a black or dark blue pen. You may use an HB pencil for any diagrams or graphs.
- Write your name, centre number and candidate number in the boxes at the top of the page.
- Write your answer to each question in the space provided.
- Do **not** use an erasable pen or correction fluid.
- Do **not** write on any bar codes.
- You may use a calculator.
- You should show all your working and use appropriate units.
- Take the weight of 1.0 kg to be 9.8 N (acceleration of free fall = 9.8 m / $s^2$).

**INFORMATION**

- The total mark for this paper is 80.
- The number of marks for each question or part question is shown in brackets [ ].

This document has **20** pages. Any blank pages are indicated.

© UCLES 2025

**1** **(a)** A hard ball is dropped vertically downwards.

Fig. 1.1 shows the speed–time graph for the ball from when it is dropped until it hits the ground.

Air resistance is ignored.

View solution

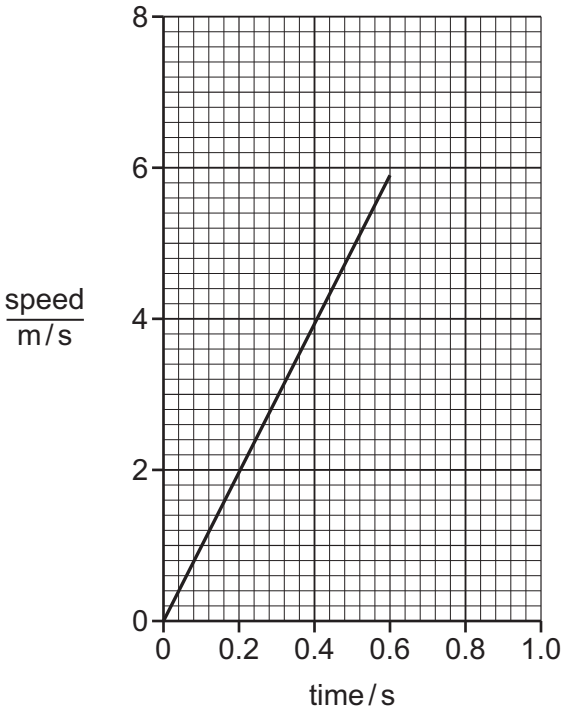


**Fig. 1.1**

**(i)** Describe the motion of the ball in Fig. 1.1.

.....

..... [1]

**(ii)** Show that the distance travelled by the ball is 1.8 m.

View solution

[2]

**(iii)** The mass of the ball is 0.54 kg. Calculate the gravitational potential energy stored in the ball immediately before it is dropped.

View solution

gravitational potential energy = ..... [2]

© UCLES 2025

**(iv)** Determine the kinetic energy of the ball when it has fallen half way to the ground.

View solution

kinetic energy = ..... [1]

**(b)** The same ball is dropped from an aeroplane. Air resistance acts on the ball.

Explain how the vertical motion of the ball changes, from when it is dropped to just before it hits the ground.

View solution

Use the idea of forces in your answer.

.....

.....

.....

.....

..... [3]

**(c)** A soft ball is dropped by a student so that it bounces on the ground.

View solution

Fig. 1.2 shows the height–time graph for the ball. The height is measured from the ground.

The ball bounces four times.

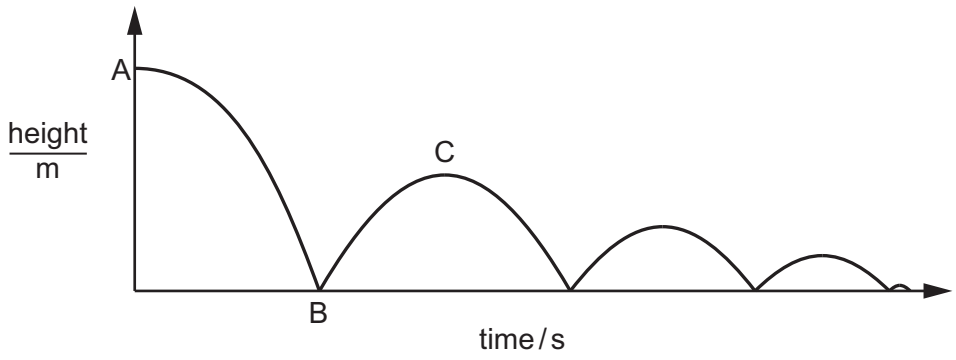


**Fig. 1.2**

Explain why the change in height of the ball between B and C is less than the change in height between A and B.

.....

.....

.....

..... [2]

[Total: 11]

**2** A cricket ball is travelling at a speed of 25 m / s horizontally through the air. The mass of the ball is 0.14 kg.

A player catches the ball and the ball comes to rest.

**(a)** Calculate the change in momentum of the ball during the catch.

View solution

change in momentum = ..... [2]

**(b)** The player's hands are in contact with the moving ball for 9.7 ms.

View solution

Calculate the horizontal force exerted by her hands to bring the ball to rest.

force = ..... [3]

[Total: 5]

**3** **(a)** Fig. 3.1 shows a Sankey diagram for the power transfer in a coal-fired power station.

View solution

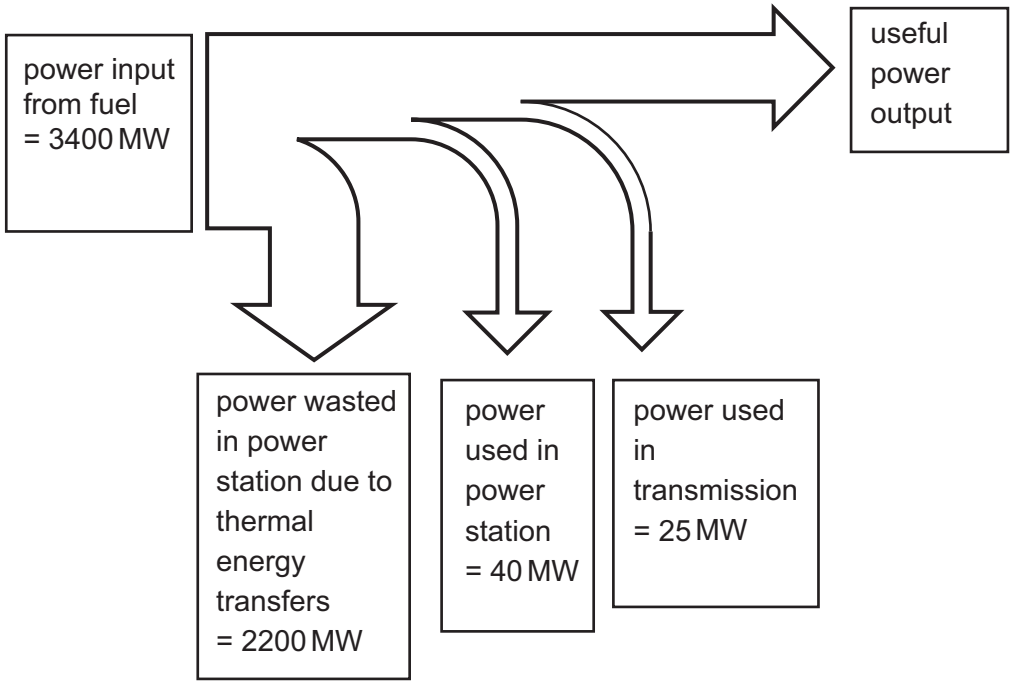


**Fig. 3.1**

**(i)** Show that the useful power output from the power station is approximately 1100 MW.

[2]

**(ii)** Calculate the efficiency of the power station.

View solution

efficiency = ..... [2]

**(b)** Describe how useful energy may be obtained from geothermal resources.

View solution

.....

.....

.....

.....

..... [2]

[Total: 6]

© UCLES 2025

**4 (a) (i)** A rectangular glass tank contains 3.0 $m^3$ of liquid. The mass of the liquid is 2800 kg. Calculate the density of the liquid.

View solution

density = ..... [1]

**(ii)** A metal block is placed in the tank and it sinks to the bottom. The top surface of the block is 1.1 m below the surface of the liquid.

View solution

Fig. 4.1 shows the block on the bottom of the tank.

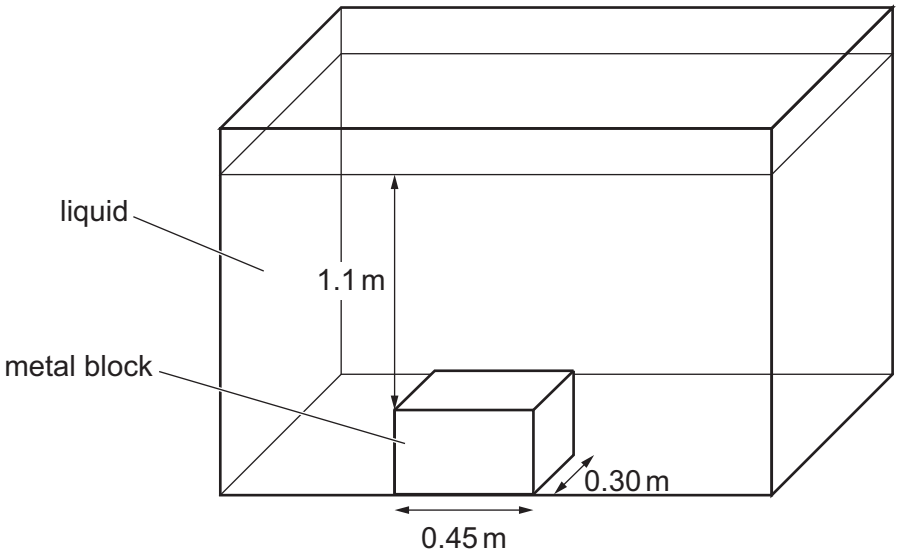


**Fig. 4.1**

Calculate the force exerted by the liquid on the top of the block.

force on top of the block = ..... [4]

© UCLES 2025

**(b)** Fig. 4.2 shows part of a steel railway track. There are small gaps between sections of the rail.

View solution

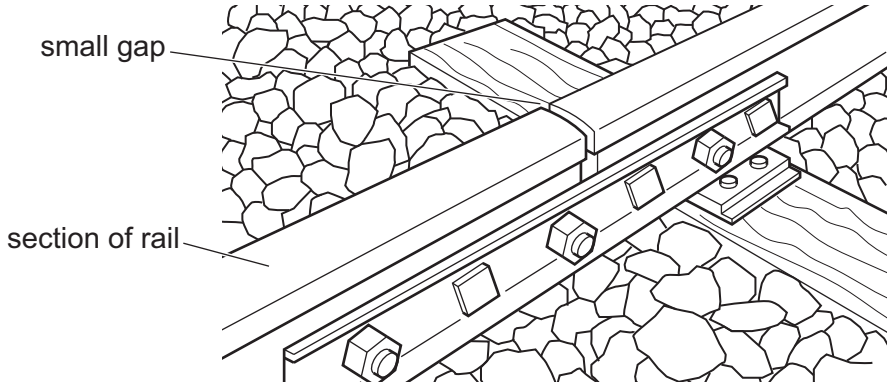


**Fig. 4.2**

State why gaps are needed between the sections of rail. Explain your answer in terms of particles.

statement .....

explanation .....

.....

[2]

**(c)** Fig. 4.3 shows a saucepan of boiling water on the heating ring of an electric cooker.

View solution

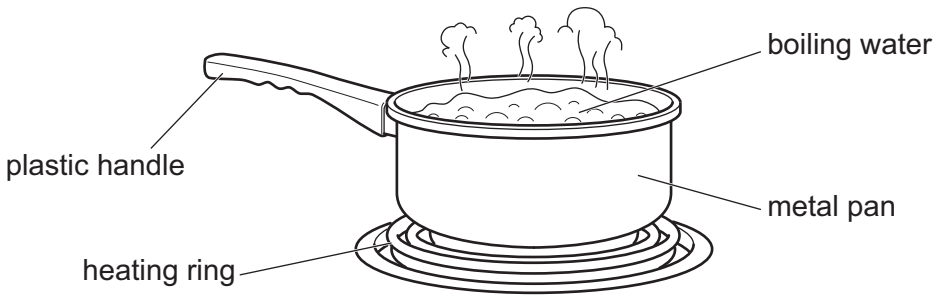


**Fig. 4.3**

The handle is made from plastic.
Explain why this material is suitable.

.....

.....

..... [2]

[Total: 9]

**5 (a) (i)** Electromagnetic waves have many uses.

On Fig. 5.1 draw **one** line from each use to the region of the electromagnetic (e-m) spectrum it uses.

View solution

| Use | Region of e-m spectrum |
|---|---|
| security marking | gamma rays |
| Bluetooth | ultraviolet |
| optical fibres | infrared |
| detection of cancer | radio waves |

**Fig. 5.1**

[2]

**(ii)** State **one** advantage of using microwaves compared with radio waves to transmit mobile (cell) phone signals.

.....

..... [1]

**(b)** Describe the difference between transverse waves and longitudinal waves.

View solution

.....

.....

.....

..... [2]

© UCLES 2025

**(c)** Fig. 5.2 shows a simplified diagram of seismic P-waves travelling through the Earth. The paths of the waves are curved.
Seismic waves are produced by rock movements in earthquakes.

View solution

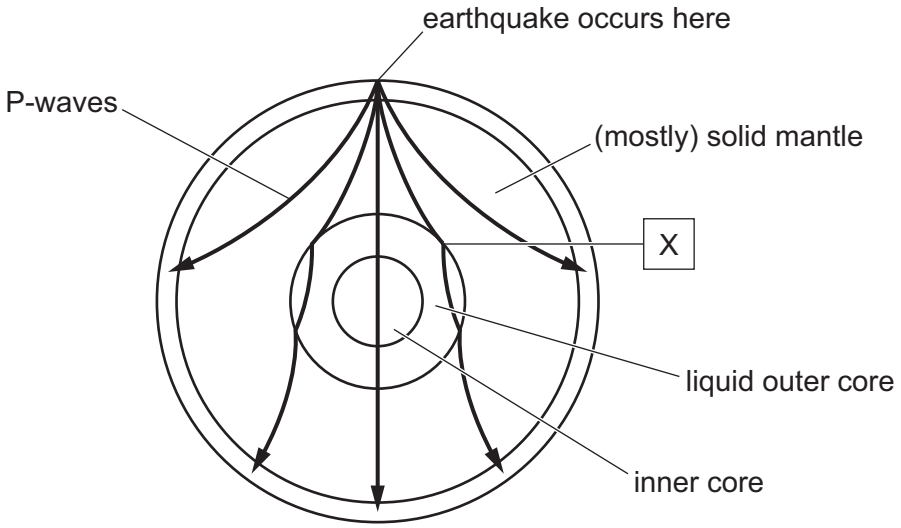


**Fig. 5.2** (not to scale)

**(i)** State the type of wave that P-waves can be modelled as.

..... [1]

**(ii)** At point X, the P-wave travels from the solid mantle to the liquid core. There is a sudden change in direction of the path of the wave.

View solution

Explain the change in direction of the P-wave at point X.

.....

.....

..... [2]

**(d)** The Earth's surface absorbs incoming radiation from the Sun and also emits thermal radiation from its surface.

Over the past 50 years, scientists estimate that the average temperature of the Earth's surface has increased by approximately 0.75 °C.

View solution

Explain what is causing this average temperature rise.

.....

.....

.....

..... [2]

[Total: 10]

**6** **(a)** Fig. 6.1 shows a circuit which includes an LDR (light-dependent resistor).

View solution

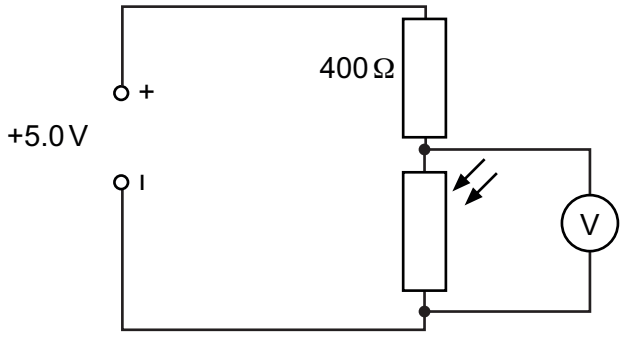


**Fig. 6.1**

The LDR is in a brightly lit room. The voltmeter reads 1.8 V.

**(i)** Calculate the current in the 400 Ω resistor.

current = ..... [3]

View solution

**(ii)** The light level in the room changes from bright to dark.

State and explain the effect on the voltmeter reading.

statement .....

explanation .....

.....

.....

.....

[3]

**(b)** Fig. 6.2 shows two light-emitting diodes (LEDs) connected in parallel in a circuit. R is a red LED and G is a green LED.

The voltmeter across the LEDs shows a potential difference (p.d.) of 2.0 V.

View solution

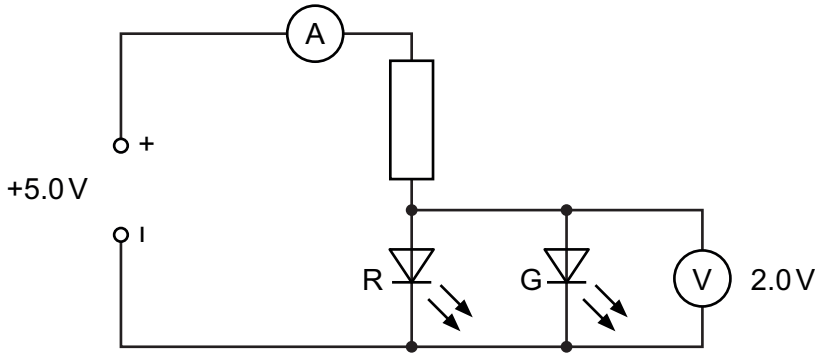


**Fig. 6.2**

**(i)** Fig. 6.3 shows a current-p.d. graph for the LEDs.

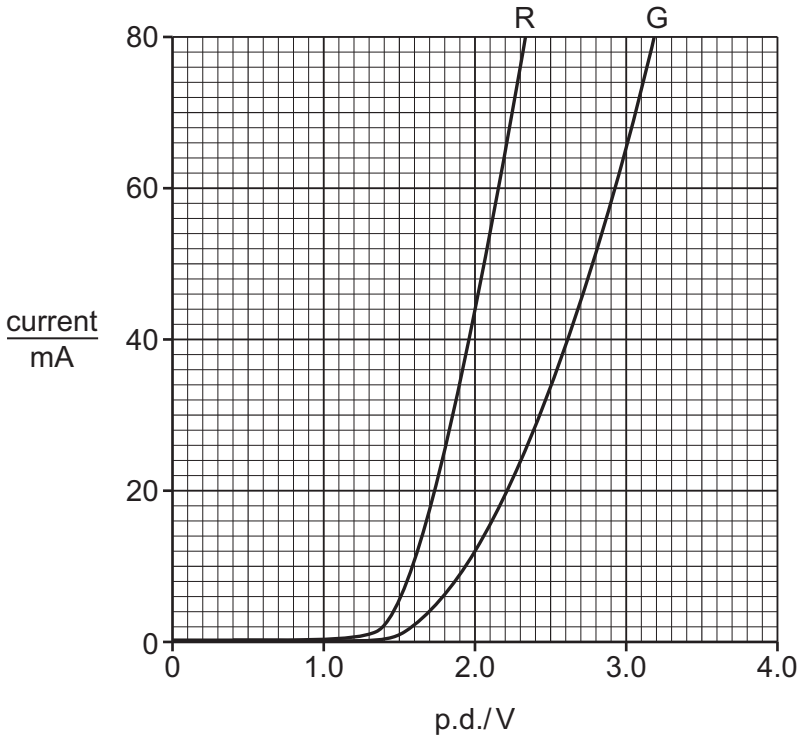


**Fig. 6.3**

Use Fig. 6.3 to determine the current in the ammeter.

current = ..... [2]

**(ii)** The connections to the power supply are reversed. State the reading on the ammeter.

current = ..... [1]

[Total: 9]

© UCLES 2025

**BLANK PAGE**

View solution

© UCLES 2025

**7** Fig. 7.1 shows a simple a.c. generator.

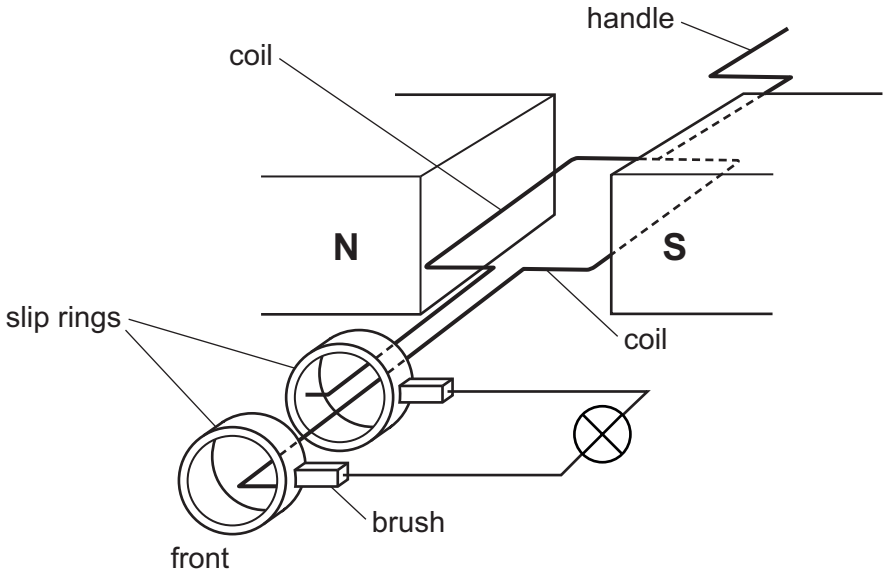


**Fig. 7.1**

**(a) (i)** Explain the function of the slip rings and brushes.

View solution

.....

.....

..... [1]

**(ii)** Describe how an alternating current is generated in the lamp.

View solution

.....

.....

.....

.....

.....

..... [3]

**(iii)** State **two** possible changes that cause a larger maximum current in the lamp.

View solution

1 .....

2 .....

[2]

**(b)** Fig. 7.2 is a graph to show how the electromotive force (e.m.f.) varies with time for the coil.

View solution

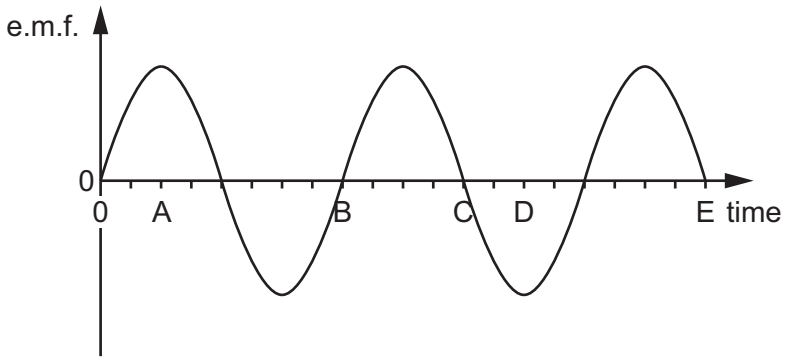


**Fig. 7.2**

**(i)** Determine how many revolutions the coil has made, from time = 0 to E.

number of revolutions = ..... [1]

**(ii)** Fig. 7.3 shows the end view of the position of the plane of the coil at time = 0. The coil is rotating anti-clockwise.

View solution

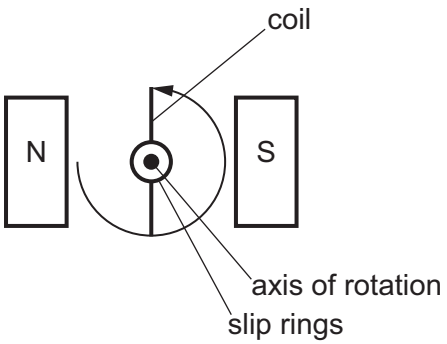


**Fig. 7.3**

On Fig. 7.4, draw **four** lines to match the coil position to the times A, B, C and D. The coil is viewed from the front.

Each coil position may be used once, more than once or not at all.

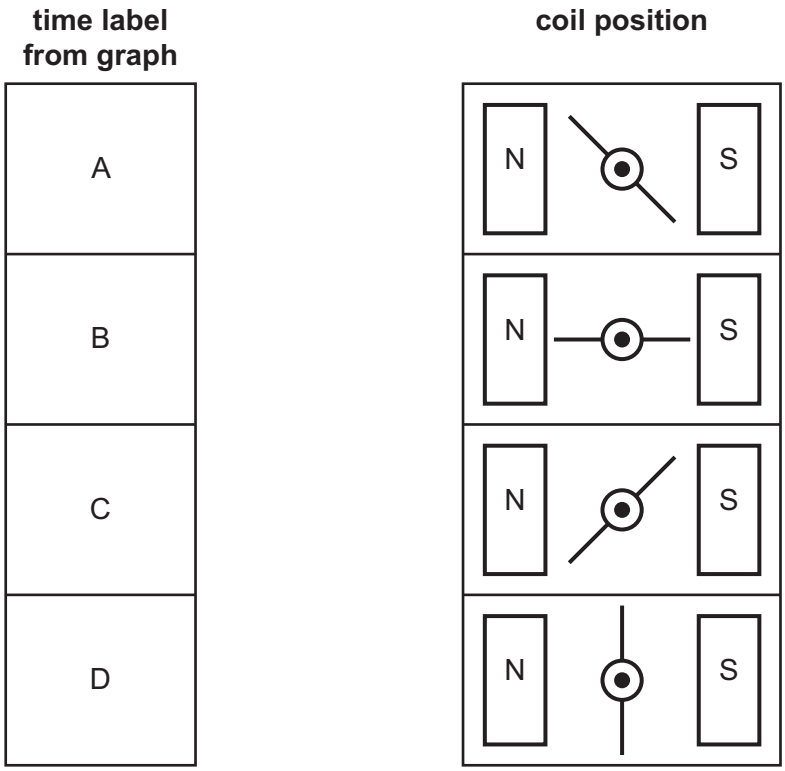


**Fig. 7.4**

[3]

[Total: 10]

© UCLES 2025

**8** **(a)** Alpha ($\alpha$) particles are directed at a very thin sheet of gold foil.

The following observations provide evidence for the nuclear model of the atom.

State what conclusions may be made about the model of the atom from these observations.

**(i)** Observation: most of the particles pass straight through the foil.

conclusion .....

.....

..... [1]

**(ii)** Observation: a few particles bounce back or are deflected through large angles.

conclusion .....

.....

..... [1]

**(b)** Fig. 8.1 shows three beams of ionising radiation, alpha, beta and gamma, passing between two parallel plates. The plates are charged and there is a uniform electric field between them.

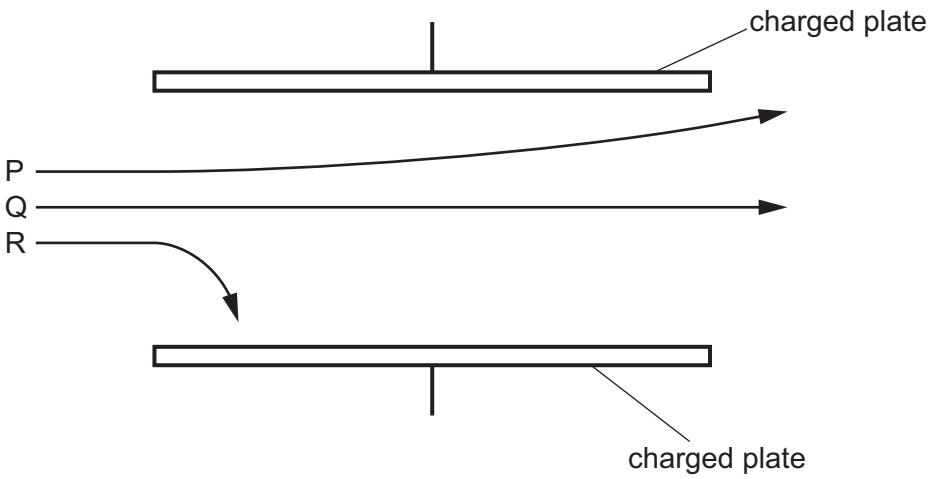


**Fig. 8.1**

**(i)** State and explain which path P, Q or R shows a beam of alpha particles.

path .....

explanation .....

.....

.....

[2]

**(ii)** State and explain the direction of the electric field between the plates.

direction .....

explanation .....

.....

.....

[1]

**(c)** Curium-242 is a radioactive isotope. It emits alpha particles. It has a half-life of 160 days.

View solution

After 480 days, the mass of curium-242 in a sample is $2.4 \times 10^{-3}$ g.

Calculate the initial mass of curium-242 in the sample.

initial mass of curium-242 = ..... [2]

[Total: 7]

**9** **(a)** Cosmic microwave background radiation (CMBR) can be observed in every direction in space around us.

View solution

**(i)** State when CMBR was produced.

..... [1]

**(ii)** State and explain how the wavelength of this radiation has changed since it was formed.

.....

.....

..... [2]

**(b)** Table 9.1 shows data about planets in our solar system.

View solution

**Table 9.1**

| planet | average radius of orbit around the Sun / $10^6$ km | time for one orbit / Earth years | average surface temperature / °C |
|---|---|---|---|
| Venus | 108 | 0.62 | 460 |
| Earth | 150 | 1.00 | 15 |
| Mars | 228 | 1.90 | –65 |
| Jupiter | 778 | 12.00 | –110 |
| Saturn | 1430 | 29.00 | –140 |

**(i)** The orbit of Venus is approximately circular.

Calculate the average orbital speed $v$ of Venus. Give your answer in km / h.

orbital speed = ..... km / h [3]

**(ii)** State how the average surface temperature of a planet changes as its distance from the Sun increases.

..... [1]

[Total: 7]

View solution

**10** **(a)** Sketch a diagram to show the orbital path of a comet around the Sun.

View solution

Mark the position of the Sun on your diagram using an S.

[2]

**(b)** Draw a cross on your diagram to show where the comet is travelling with the slowest speed. Label the cross **L**. [1]

**(c)** Explain why the speed of a comet changes as it travels around its orbit.

View solution

Use the conservation of energy in your explanation.

.....

.....

.....

..... [3]

[Total: 6]

**BLANK PAGE**

Permission to reproduce items where third-party owned material protected by copyright is included has been sought and cleared where possible. Every reasonable effort has been made by the publisher (UCLES) to trace copyright holders, but if any items requiring clearance have unwittingly been included, the publisher will be pleased to make amends at the earliest possible opportunity.

To avoid the issue of disclosure of answer-related information to candidates, all copyright acknowledgements are reproduced online in the Cambridge Assessment International Education Copyright Acknowledgements Booklet. This is produced for each series of examinations and is freely available to download at www.cambridgeinternational.org after the live examination series.

Cambridge Assessment International Education is part of Cambridge Assessment. Cambridge Assessment is the brand name of the University of Cambridge Local Examinations Syndicate (UCLES), which is a department of the University of Cambridge.

© UCLES 2025