Cambridge Assessment International Education

Cambridge IGCSE™

CANDIDATE NAME									
CENTRE NUMBER						CANDIDATE NUMBER			

PHYSICS **0625/61**

Paper 6 Alternative to Practical **October/November 2025**

1 hour

You must answer on the question paper.

No additional materials are needed.

INSTRUCTIONS

- Answer **all** questions.
- Use a black or dark blue pen. You may use an HB pencil for any diagrams or graphs.
- Write your name, centre number and candidate number in the boxes at the top of the page.
- Write your answer to each question in the space provided.
- Do **not** use an erasable pen or correction fluid.
- Do **not** write on any bar codes.
- You may use a calculator.
- You should show all your working and use appropriate units.

INFORMATION

- The total mark for this paper is 40.
- The number of marks for each question or part question is shown in brackets [ ].

This document has **12** pages. Any blank pages are indicated.

© UCLES 2025

1 A student investigates the balancing of a metre ruler.

Fig. 1.1 shows the apparatus.

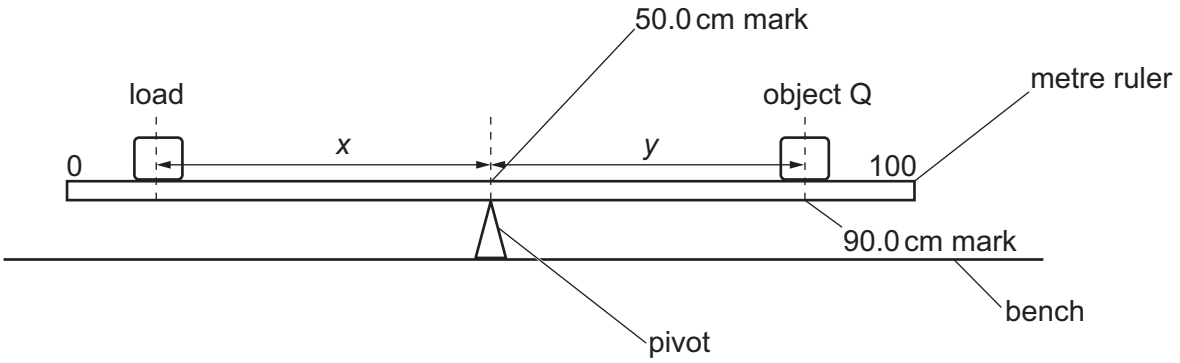

Fig. 1.1

(a) The student places a metre ruler on a pivot at the 50.0 cm mark.

She places an object Q with its centre on the metre ruler at the 90.0 cm mark.

Determine the distance *y* from the 50.0 cm mark to the centre of the object Q.

y = ... cm [2]

(b) She places a 2.0 N load on the metre ruler.

She adjusts the position of the load so that the metre ruler is as near as possible to being balanced.

She measures the distance *x* from the centre of the load to the 50.0 cm mark.

x = 21.5 cm

(i) Calculate the weight *W* of object Q, using the equation $W = \frac{x}{y} \times 2.0\,\text{N}$.

Give your answer to a suitable number of significant figures for this experiment.

W = ... N [2]

She repeats the procedure, using a 3.0 N load. She does not change the position of object Q.

x = 14.8 cm

(ii) Calculate a new value of the weight *W* of object Q, using the equation $W = \frac{x}{y} \times 3.0\,\text{N}$.

Give your answer to a suitable number of significant figures for this experiment.

W = ... N [1]

© UCLES 2025

(c) State and explain whether your two values of W are equal within the limits of experimental accuracy. Refer to the values of W in your answer.

statement .....

explanation .....

.....

.....

[2]

(d) Explain how you ensure that the centre of object Q is directly over the 90.0 cm mark of the metre ruler. You may draw a diagram.

View solution

.....

.....

.....

..... [1]

(e) It is difficult to find the position of the load to obtain the exact balance of the metre ruler.

View solution

Explain how you try to overcome this difficulty.

.....

.....

..... [1]

(f)

View solution

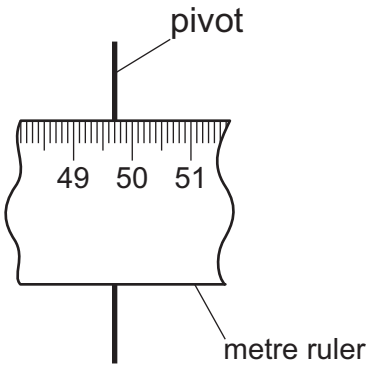

Fig. 1.2

Fig. 1.2 shows the metre ruler balanced on the pivot with no loads. The balance point shows the position of the centre of mass of the metre ruler.

Determine the distance *d* between the 50.0 cm mark on the metre ruler and the centre of mass.

Show your working.

d = ... [2]

[Total: 11]

© UCLES 2025

2 A student investigates the resistance of a wire.

Fig. 2.1 shows the circuit he uses.

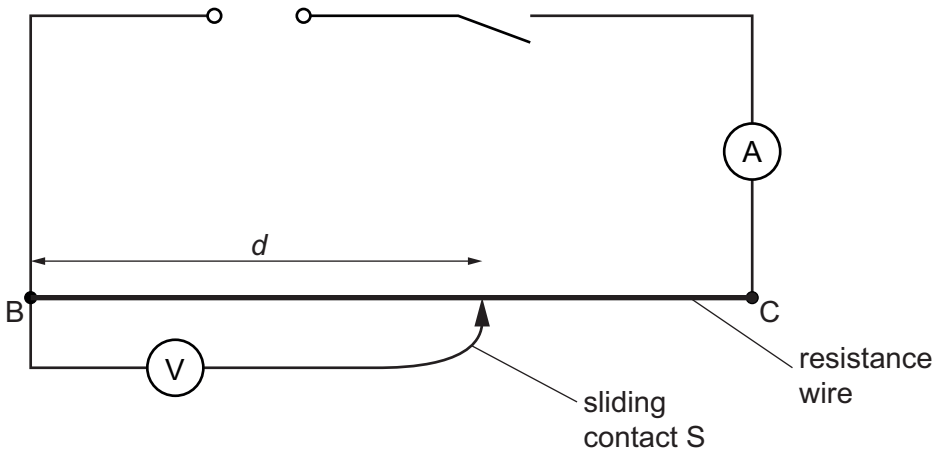

Fig. 2.1

View solution

(a) Record the ammeter reading shown in Fig. 2.2.

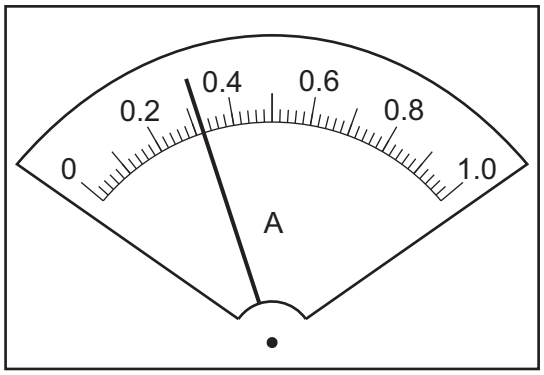

Fig. 2.2

I = ... A [1]

(b) The student places the sliding contact 15.0 cm from B.

He measures the potential difference (p.d.) V across the length d = 15.0 cm of resistance wire BC.

He repeats the procedure using values of d = 40.0 cm, d = 60.0 cm and d = 80.0 cm.

The values of d, V and R are shown in Table 2.1.

The voltmeter reading he obtains when d = 100.0 cm is shown in Fig. 2.3.

(i) Record, in the last row of Table 2.1, the voltmeter reading shown in Fig. 2.3. [1]

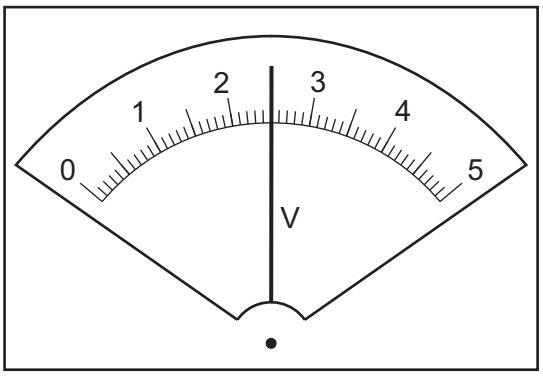

Fig. 2.3

(ii) Calculate the resistance R of 100.0 cm of the resistance wire, using the equation

$$R = \frac{V}{I}.$$

Record R in the last row of Table 2.1.

[1]

(iii) Complete the column headings in Table 2.1. [1]

Table 2.1

d /	V /	R /
15.0	0.4	1.25
40.0	1.1	3.44
60.0	1.4	4.38
80.0	2.1	6.56
100.0		

© UCLES 2025

(c) Plot a graph of resistance R/Ω (y-axis) against length d/cm (x-axis). Draw a best-fit line.

View solution

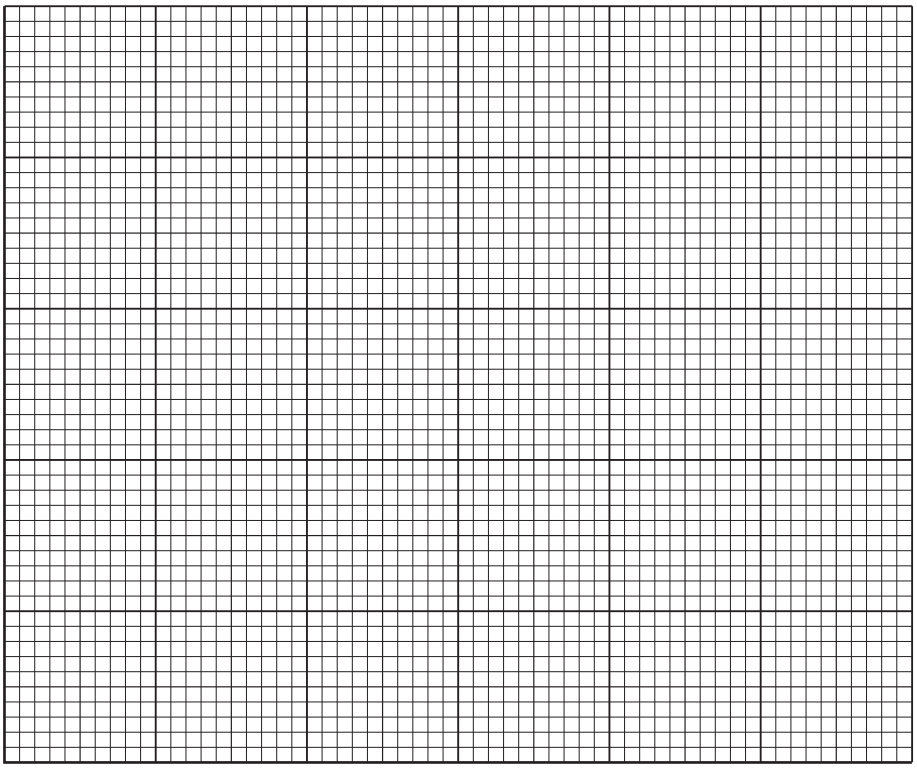

[4]

(d) Use your graph to determine the resistance R_{75} of a length $d = 75.0$ cm of the resistance wire. Show clearly on the graph how you obtained the value.

R_{75} = ... [3]

[Total: 11]

View solution

3 A student investigates the refraction of light in the material of a transparent block.

Fig. 3.1 shows the ray-trace sheet. The student places a transparent block on the sheet and labels the block **ABCD**.

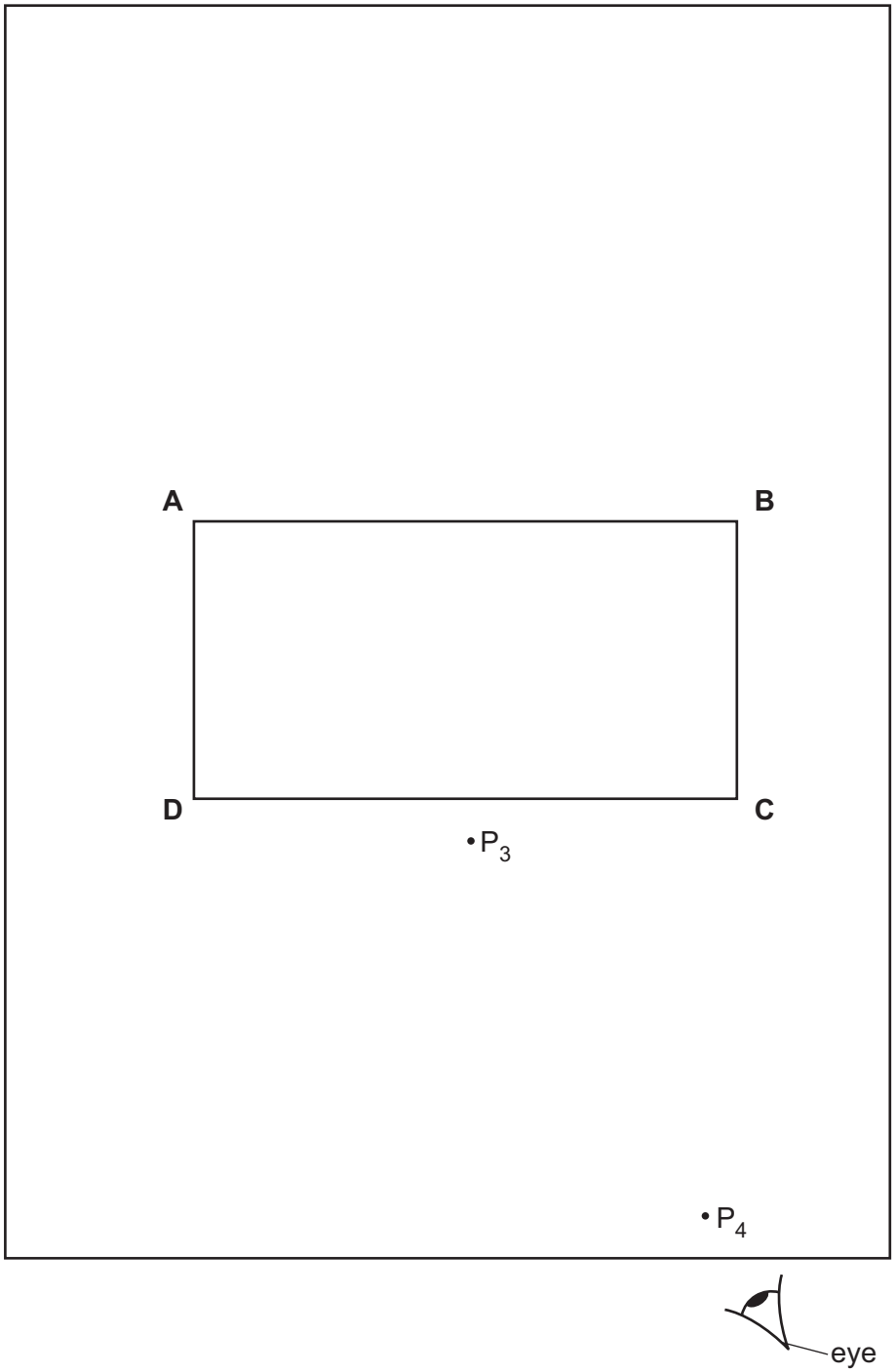

Fig. 3.1

(a) On Fig. 3.1, draw a normal **NL** to the side **AB** of the transparent block at a distance 2.0 cm from **A**. Continue the normal so that it passes through side **CD** of the block.

Label the point **S** where **NL** crosses **AB**.

View solution

[2]

(b) • Draw a line **RS** at an angle $i = 30°$ to the normal, above **AB** and to the left of the normal.

• The student places two pins P_1 and P_2 on line **RS**. Mark, with two crosses (X), on line **RS**, positions of the pins at a suitable distance apart for this experiment.

[2]

(c) The student looks from the position of the eye shown in Fig. 3.1, to observe the images of P_1 and P_2 through side **CD** of the block. He adjusts his line of sight until the images of P_1 and P_2 appear exactly one behind the other.

He places two pins P_3 and P_4 between side **CD** of the block and his eye so that P_3, P_4 and the images of P_1 and P_2 seen through the block, appear exactly one behind the other.

View solution

The positions of P_3 and P_4 are shown on Fig. 3.1.

• Draw a line through the positions of P_3 and P_4. Continue the line until it meets the normal **NL** and label that point **E**.

• Label the other end of the line **F**.

• Measure the acute angle θ between **EF** and the normal. An acute angle is an angle less than 90°.

angle θ = ... [2]

(d) **(i)** Tick **one** box to complete the sentence.

View solution

To produce the most accurate ray-trace, a student places the pins P_1 and P_2

☐ exactly 5.0 cm apart.

☐ less than 5.0 cm apart.

☐ more than 5.0 cm apart.

[1]

(ii) Suggest **two** other techniques that the student can use to produce an accurate ray-trace.

1. .....

.....

2. .....

.....

[2]

(e) The student plans to investigate the relationship between angle i and angle θ. The student takes more sets of readings to test the relationship. List suitable values of angle i that the student can use.

.....

..... [2]

View solution [Total: 11]

4 A student is investigating electrical heaters that are used in the school laboratory to heat beakers of water. The heaters are all 12 V heaters with the same power rating. The student thinks that some heaters are more efficient than other heaters.

Plan an experiment to compare how quickly the heaters increase the temperature of water to boiling point.

View solution

The following apparatus is available to the student:

- five electrical heaters
- beakers
- supply of water
- 12 V power supply with suitable leads.

Other apparatus normally available in a school laboratory can also be used.

In your plan:

- list any additional apparatus required
- explain briefly how you do the investigation, including the measurements you take
- state the key variables to be kept constant
- draw a suitable table, with column headings, to show how to display your readings (you are **not** required to enter any readings in the table)
- explain how you use the results to reach a conclusion.

© UCLES 2025

[7]

BLANK PAGE

Permission to reproduce items where third-party owned material protected by copyright is included has been sought and cleared where possible. Every reasonable effort has been made by the publisher (UCLES) to trace copyright holders, but if any items requiring clearance have unwittingly been included, the publisher will be pleased to make amends at the earliest possible opportunity.

To avoid the issue of disclosure of answer-related information to candidates, all copyright acknowledgements are reproduced online in the Cambridge Assessment International Education Copyright Acknowledgements Booklet. This is produced for each series of examinations and is freely available to download at www.cambridgeinternational.org after the live examination series.

Cambridge Assessment International Education is part of Cambridge Assessment. Cambridge Assessment is the brand name of the University of Cambridge Local Examinations Syndicate (UCLES), which is a department of the University of Cambridge.

© UCLES 2025