Cambridge Assessment International Education

Cambridge IGCSE™

CANDIDATE NAME									
CENTRE NUMBER						CANDIDATE NUMBER				

PHYSICS **0625/62**

Paper 6 Alternative to Practical **October/November 2025**

1 hour

You must answer on the question paper.

No additional materials are needed.

INSTRUCTIONS

- Answer **all** questions.
- Use a black or dark blue pen. You may use an HB pencil for any diagrams or graphs.
- Write your name, centre number and candidate number in the boxes at the top of the page.
- Write your answer to each question in the space provided.
- Do **not** use an erasable pen or correction fluid.
- Do **not** write on any bar codes.
- You may use a calculator.
- You should show all your working and use appropriate units.

INFORMATION

- The total mark for this paper is 40.
- The number of marks for each question or part question is shown in brackets [ ].

This document has **16** pages. Any blank pages are indicated.

© UCLES 2025

1 A student investigates the reflection of light by a plane mirror.
The student's ray-trace is shown full-size in Fig. 1.1.

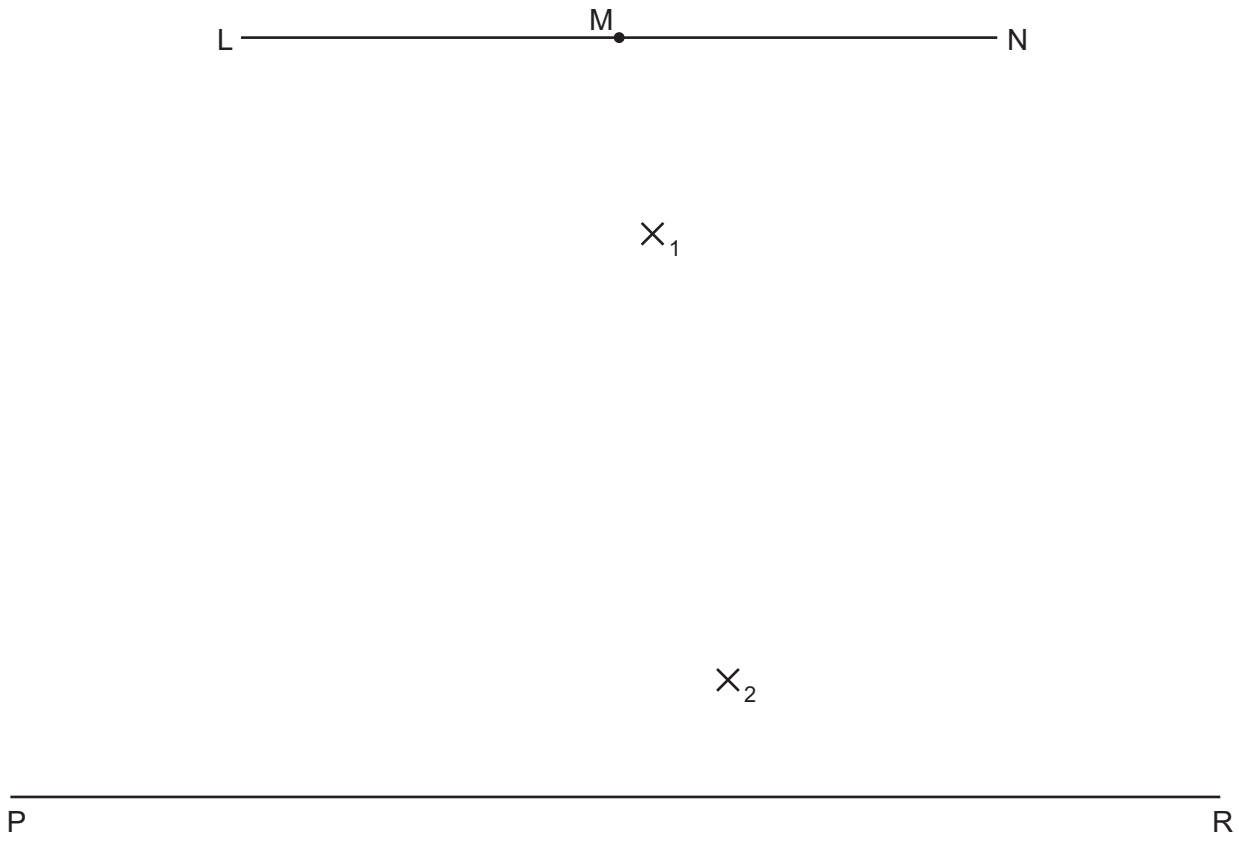

Fig. 1.1

(a) The student:

- draws line **LN**
- labels the mid-point of **LN** with the letter **M**
- draws a line **PR** parallel to **LN** and 10.0 cm below it

On Fig. 1.1, draw a normal to **LN** at the point **M**. Extend the normal downwards until it crosses the line **PR**. Label the point at which the normal crosses **PR** with the letter **Q**. [1]

View solution

(b) On Fig. 1.1, draw a line 14.0 cm long from point **M** at an angle $\theta = 10°$, as shown in Fig. 1.2. Label the other end of the line **O**. [2]

View solution

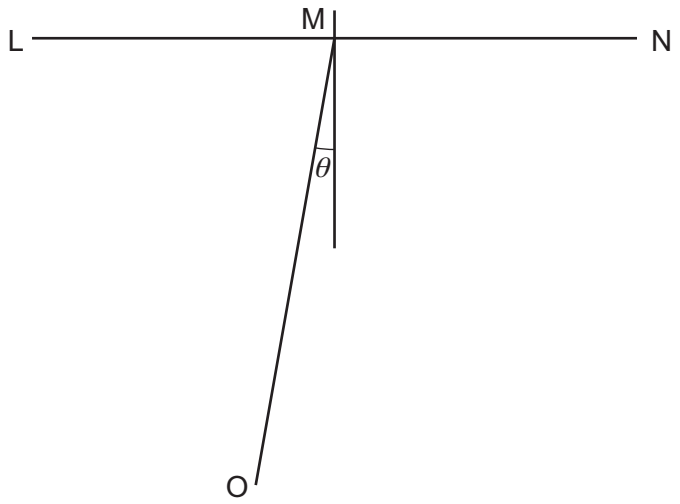

Fig. 1.2

View solution

(c) The student:

- places the reflecting surface of a mirror along the line **LN**, with its reflecting surface facing the bottom of the page, and with the centre of the mirror at **M**
- positions a light source and slit so that a ray of light passes along the line **OM** towards **M**
- marks two small crosses X_1 and X_2, a suitable distance apart on the ray reflected from the mirror
- removes the mirror and the illuminated slit.

(i) On Fig. 1.1, draw a line joining **M** to X_1 and X_2.

Continue the line until it crosses the line **PR** and label the point where it crosses **PR** with the letter **T**. [1]

(ii) Measure the length *a* of the line **QT** in centimetres to the nearest millimetre and the length *b* of the line **MT** in centimetres to the nearest millimetre. Record your measurements below and in Table 1.1.

a = ... cm

b = ... cm
[1]

View solution

(d) Calculate the ratio $r = \frac{a}{b}$. Record your answer in Table 1.1.

View solution

Give your answer to 2 significant figures.

Table 1.1

θ / °	a / cm	b / cm	$r = \frac{a}{b}$
10			
20	4.2	12.8	0.33
30	6.8	13.7	0.50

[2]

(e) The student repeats the procedure in **(b)** and **(c)** for values of $\theta = 20°$ and $\theta = 30°$.

View solution

The student's results are recorded in Table 1.1.

The student states that r is directly proportional to θ.

State if you agree with the student.

Use values from Table 1.1 to justify your answer.

statement .....

justification .....

.....

.....

[2]

(f) Suggest what the student can do to have more confidence in their answer to part **(e)**.

View solution

.....

.....

..... [1]

(g) Suggest **one** source of inaccuracy in this experiment, even if it is carried out very carefully.

.....

..... [1]

[Total: 11]

View solution

2 A student investigates an electric circuit to find the resistance of an unknown resistor Z.

The student sets up the incomplete circuit shown in Fig. 2.1. There is a gap between the points labelled X and Y.

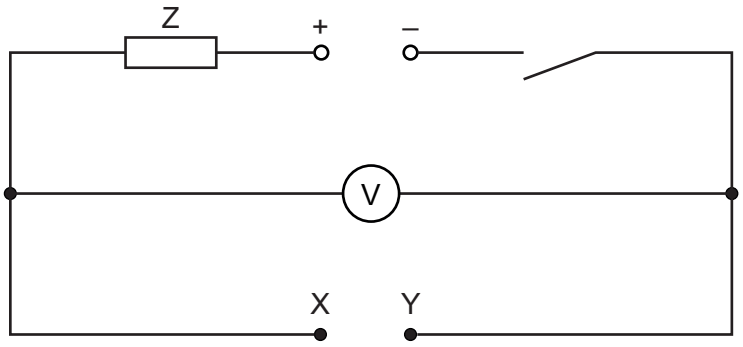

Fig. 2.1

View solution

(a) The student:

- closes the switch
- records the voltmeter reading V_0
- opens the switch.

The reading on the voltmeter is shown in Fig. 2.2.
Record the voltmeter reading V_0.

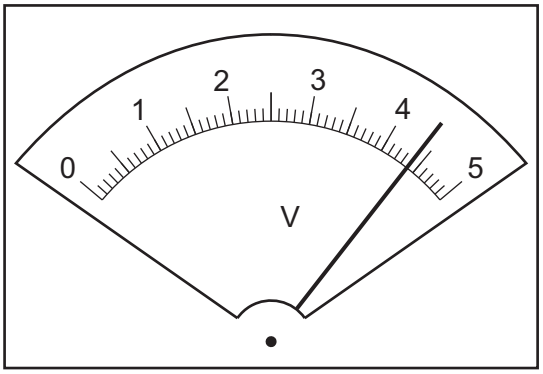

Fig. 2.2

V_0 = ... V [1]

(b) The student:

View solution

- connects a 10 Ω resistor between points X and Y
- closes the switch
- records, in Table 2.1, the reading V on the voltmeter
- opens the switch
- repeats this procedure for resistors of resistances R = 22 Ω, 39 Ω, 47 Ω and 68 Ω.

Table 2.1

resistance R/Ω	voltmeter reading V/V	current I/A
10	1.35	
22	2.20	0.10
39	2.85	0.073
47		0.064
68	3.37	0.050

(i) Use the voltmeter reading in Table 2.1 when the 10 Ω resistor is connected between X and Y to calculate the current I in the circuit. Use the equation:

$$I = \frac{V}{R}$$

Record your value of I in Table 2.1 to 2 significant figures. [2]

(ii) The voltmeter reading V for the 47 Ω resistor is missing. Calculate V.

View solution

V = ... V

Add your answer to Table 2.1. [1]

© UCLES 2025

(c) Plot a graph of V/V (y-axis) against I/A (x-axis). Start your axes at the origin (0,0).

View solution

Draw a best-fit straight line.



[4]

(d) Determine the gradient G of your line. Show all working and indicate on the graph the values you use.

View solution

G = ... [2]

(e) The gradient of your line is numerically equal to the resistance R_Z of the unknown resistor Z.

Write down the value of the resistance R_Z.

View solution

Record your answer to the nearest ohm.

R_Z = ... Ω [1]

[Total: 11]

© UCLES 2025

BLANK PAGE

3 A student investigates the cooling of water.
The student sets up the apparatus shown in Fig. 3.1.

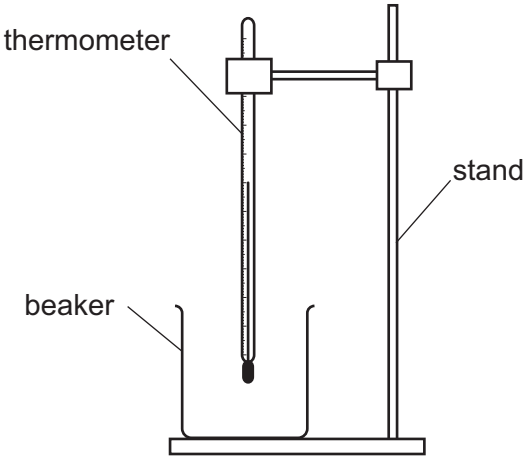

Fig. 3.1

View solution

(a) The student records the room temperature θ_R.

θ_R = 21.5 °C

The student:

- pours 60 cm^3 of hot water into the beaker
- waits for 30 s
- measures, and records in Table 3.1 at time t = 0, the temperature θ of the water
- immediately starts a stop-watch and measures the temperature of the water at one-minute intervals for 5 minutes.

The reading on the thermometer for time t = 0 is shown in Fig. 3.2.

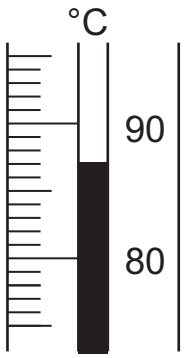

Fig. 3.2

© UCLES 2025

(i) Record the temperature in Table 3.1 to the nearest 0.5 °C. [1]

(ii) Complete the time t column. [1]

View solution

Table 3.1

time t /	temperature θ / °C
0	
	80.5
	75.5
	71.0
	67.5
	64.0

(b) (i) Suggest why the student waits for 30 s before measuring the initial temperature of the hot water.

.....

..... [1]

(ii) State how the student ensures that the temperature readings are as accurate as possible.

.....

..... [1]

(c) (i) Calculate the decrease in temperature $\Delta\theta$ of the hot water during the **first two** minutes of cooling.

View solution

$\Delta\theta$ = ... °C [1]

(ii) Calculate the average rate of cooling R_1 of the hot water during the **first two** minutes of cooling.

View solution

Use the equation:

$$R_1 = \frac{\text{decrease in temperature}}{\text{time}}$$

Include the unit in your answer.

R_1 = ... unit = ... [2]

(iii) Calculate the average rate of cooling R_2 of the hot water during the **final two** minutes of cooling.

View solution

R_2 = ... [1]

© UCLES 2025

(d) Use your answers in **(c)(ii)** and **(c)(iii)** to write a conclusion about the way in which hot water in a beaker cools.

.....

..... [1]

(e) The water in the beaker is left to continue cooling.

View solution

(i) Estimate the temperature of the water θ_5 after a further 5 minutes of cooling.

θ_5 = ... °C [1]

(ii) Estimate the temperature of the water θ_{50} after a further 50 minutes of cooling.

θ_{50} = ... °C [1]

[Total: 11]

View solution

4 A student sets up a flexible track on the laboratory bench.

The student investigates the motion of a metal ball as it rolls from rest down the track. The metal ball rolls down the track, up the other side of the track, and comes momentarily to rest at a height *h* above the bench before rolling back down again.

View solution

Plan an experiment to investigate how **one** variable affects the size of this height *h*.

The apparatus available includes:

- flexible track
- two clamps, bosses and stands to support the track
- selection of metal balls.

Fig. 4.1 shows how the flexible track is supported.

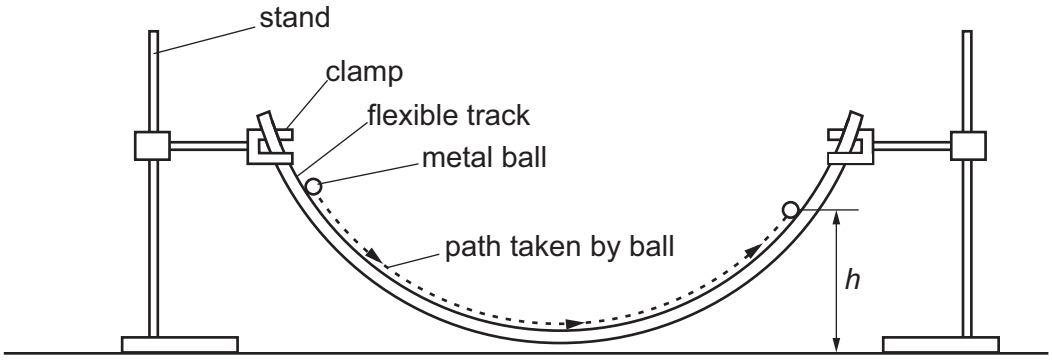

Fig. 4.1

In your plan:

- state the **one** variable you have chosen to investigate
- list any additional apparatus needed
- explain how to do the experiment
- state the key variables to be kept constant
- draw a table, with column headings, to show how to display the readings (you are **not** required to enter any readings in the table)
- explain how to use the readings to reach a conclusion.

.....

.....

.....

.....

.....

.....

.....

.....

.....

.....

.....

.....

.....

.....

.....

.....

.....

..... [7]

BLANK PAGE

© UCLES 2025

BLANK PAGE

BLANK PAGE

Permission to reproduce items where third-party owned material protected by copyright is included has been sought and cleared where possible. Every reasonable effort has been made by the publisher (UCLES) to trace copyright holders, but if any items requiring clearance have unwittingly been included, the publisher will be pleased to make amends at the earliest possible opportunity.

To avoid the issue of disclosure of answer-related information to candidates, all copyright acknowledgements are reproduced online in the Cambridge Assessment International Education Copyright Acknowledgements Booklet. This is produced for each series of examinations and is freely available to download at www.cambridgeinternational.org after the live examination series.

Cambridge Assessment International Education is part of Cambridge Assessment. Cambridge Assessment is the brand name of the University of Cambridge Local Examinations Syndicate (UCLES), which is a department of the University of Cambridge.

© UCLES 2025