Cambridge Assessment International Education

Cambridge IGCSE™

CANDIDATE NAME									
CENTRE NUMBER						CANDIDATE NUMBER				

PHYSICS **0625/63**

Paper 6 Alternative to Practical **October/November 2025**

1 hour

You must answer on the question paper.

No additional materials are needed.

INSTRUCTIONS

- Answer **all** questions.
- Use a black or dark blue pen. You may use an HB pencil for any diagrams or graphs.
- Write your name, centre number and candidate number in the boxes at the top of the page.
- Write your answer to each question in the space provided.
- Do **not** use an erasable pen or correction fluid.
- Do **not** write on any bar codes.
- You may use a calculator.
- You should show all your working and use appropriate units.

INFORMATION

- The total mark for this paper is 40.
- The number of marks for each question or part question is shown in brackets [ ].

This document has **16** pages. Any blank pages are indicated.

© UCLES 2025

1 A student determines the volume of a block of modelling clay by two methods.

Method 1

He measures the block of modelling clay shown full size in Fig. 1.1.

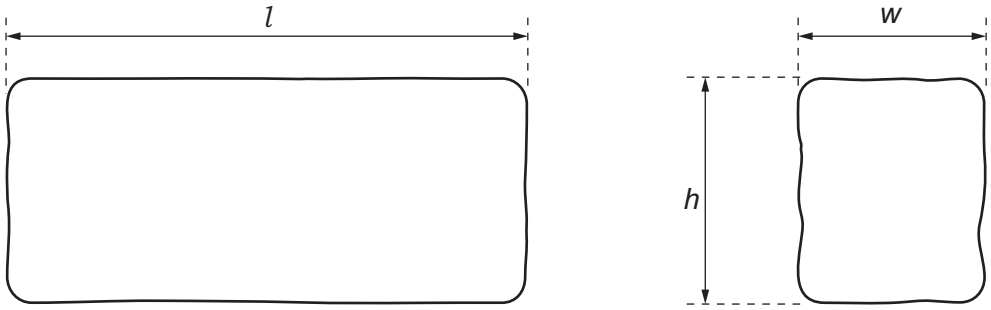

Fig. 1.1

View solution

(a) (i) Measure the length l, width w and height h of the block of modelling clay on Fig. 1.1. Record your values in centimetres to the nearest millimetre.

length l = ... cm

width w = ... cm

height h = ... cm
[2]

(ii) Calculate a value V_A for the volume of the block. Use your measurements from **(a)(i)** and the equation:

View solution

$$V_A = l \times w \times h.$$

V_A = ... cm^3 [1]

(b) Suggest why V_A is only an approximate value for the volume of the block.

View solution

Describe how the accuracy of V_A can be improved.

suggestion .....

.....

improvement .....

.....

[2]

(c) Another student measures the dimensions of a block of clay which is much smaller than the block in **(a)**. Suggest why these measurements may not be as accurate as yours, even if they are done carefully.

.....

.....

..... [1]

Method 2

View solution

(d) **(i)** The student pours water into a measuring cylinder.

View solution

Record the volume V_1 of the water in the measuring cylinder shown in Fig. 1.2.

V_1 = ... cm^3 [1]

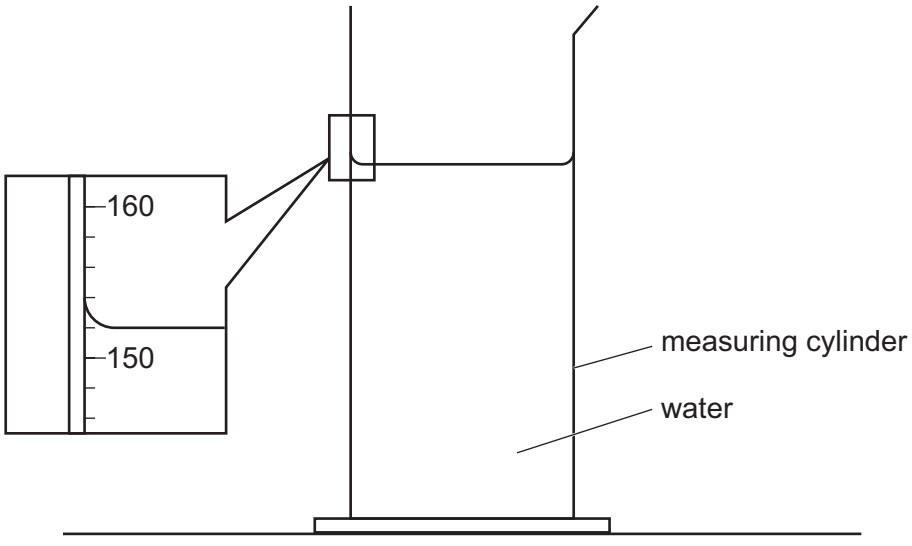

Fig. 1.2

(ii) Describe briefly how a measuring cylinder is read to obtain an accurate value for the volume of water.

.....

..... [1]

(e) The student lowers the modelling clay into the water using a loop of thread, as shown in Fig. 1.3.

View solution

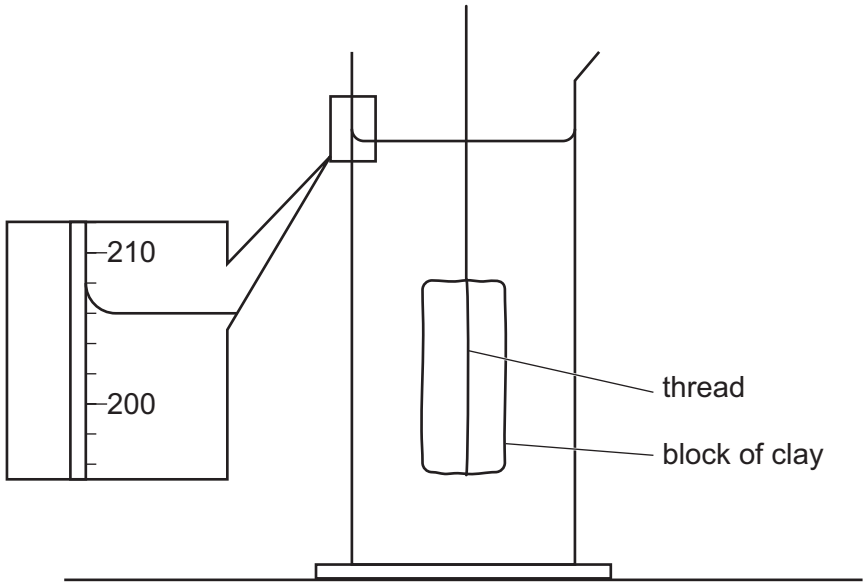

Fig. 1.3

Record the new reading V_2 shown on the measuring cylinder scale in Fig.1.3.

V_2 = ... cm^3

Calculate another value V_B for the volume of the block.

Use your measurements from **(d)(i)** and **(e)** and the equation: $V_B = (V_2 - V_1)$.

V_B = ... cm^3
[1]

(f) Suggest **one** possible source of inaccuracy in Method 2 and suggest **one** improvement to reduce its effect.

source of inaccuracy .....

.....

improvement .....

.....
[2]

View solution

[Total: 11]

2 A student investigates the resistances of identical wires connected in parallel.

She uses the circuit shown in Fig. 2.1.

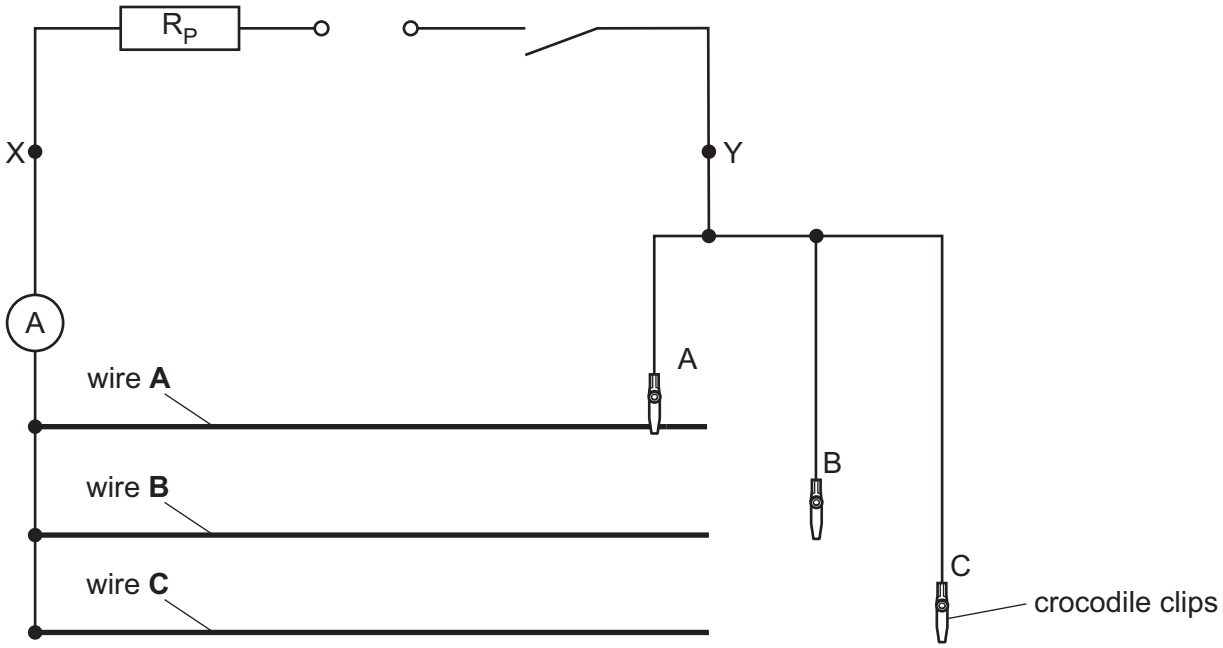

Fig. 2.1

View solution

(a) On Fig. 2.1, draw a voltmeter connected so that it will measure the potential difference (p.d.) across terminals X and Y.

[1]

Circuit A

View solution

(b) The student connects crocodile clip A to a length l = 80.0 cm of resistance wire A.

(i) On Fig. 2.2, draw an arrow (◄►) to indicate precisely between which two points she should measure l = 80.0 cm for wire A.

[1]



Fig. 2.2

© UCLES 2025

(ii) The student measures the potential difference V across terminals X and Y and measures the current I in the circuit.
The readings on the meters are shown in Fig. 2.3 and Fig. 2.4.

View solution

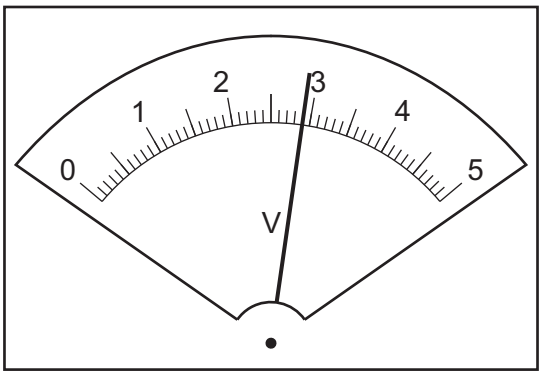

Fig. 2.3

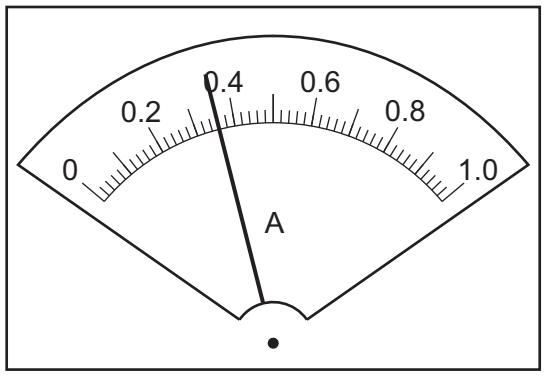

Fig. 2.4

Read, and record in the first line of Table 2.1, the values of V and I shown on the meters in Fig. 2.3 and Fig. 2.4.

Table 2.1

circuit	V/V	I/A	R/Ω
A			
B	2.2	0.59	
C	1.8	0.72	

[2]

(c)

View solution

Circuit B

The student connects crocodile clip B to a length l = 80.0 cm of resistance wire B so that wires A and B are connected in parallel.

Circuit C

The student connects crocodile clip C to a length l = 80.0 cm of resistance wire C so that wires A, B and C are connected in parallel.
In each circuit, she measures the potential difference V across terminals X and Y and measures the current I in the circuit.
Her readings are shown in Table 2.1.

Calculate, and record in Table 2.1, the resistance R of each wire combination.
Use the equation:

$$R = \frac{V}{I}.$$

[2]

(d) **(i)** Record a resistance R_A. R_A is the value of R from Circuit A.

R_A = ... Ω

Calculate a resistance R_B. Use the value of R from Circuit B and the equation:

View solution

$$R_B = R \times 2$$

R_B = ... Ω

Calculate a resistance R_C. Use the value of R from Circuit C and the equation:

$$R_C = R \times 3$$

R_C = ... Ω

[1]

(ii) A student suggests that the values of R_A, R_B and R_C should be equal.

View solution

State whether your results support this suggestion. Use values from your results to justify your answer.

statement .....

justification .....

.....

.....

[2]

(e) Briefly explain why resistor R_P, shown in Fig. 2.1, must remain in place throughout the experiment.

.....

.....

..... [1]

(f) One possible problem with this type of experiment is heating of the resistance wires. Suggest what to do to reduce this.

.....

.....

..... [1]

[Total: 11]

View solution

BLANK PAGE

3 A student investigates the image produced by a converging lens.

He uses the equipment shown in Fig. 3.1.

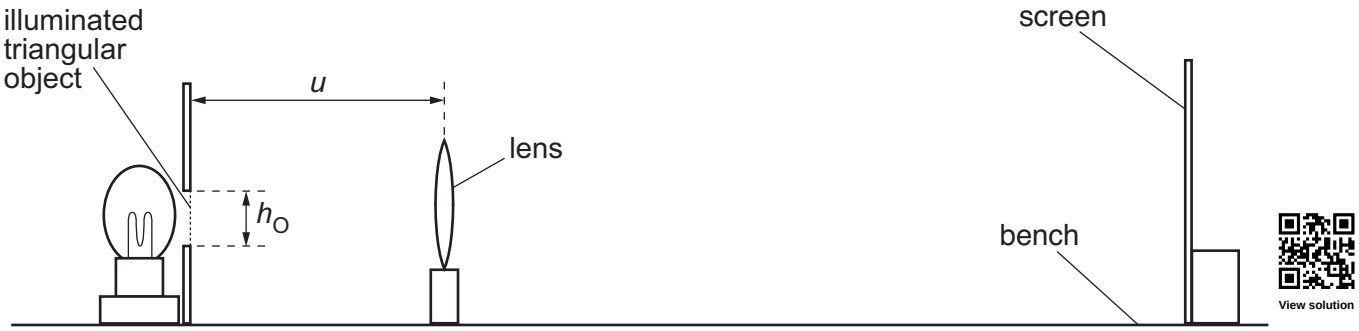

View solution

Fig. 3.1 (not to scale)

(a) The student sets the distance u between the illuminated triangular object and the lens to 20.0 cm. He moves the screen until a sharp image of the illuminated triangular object is seen on the screen.

Briefly describe **one** technique to obtain an image on the screen which is as sharp as possible in this experiment.

.....

..... [1]

(b) **(i)** The screen is shown full size in Fig. 3.2.
Measure, and record in the first line of Table 3.1, the height h_I of the image on the screen, as shown in Fig. 3.2.

View solution

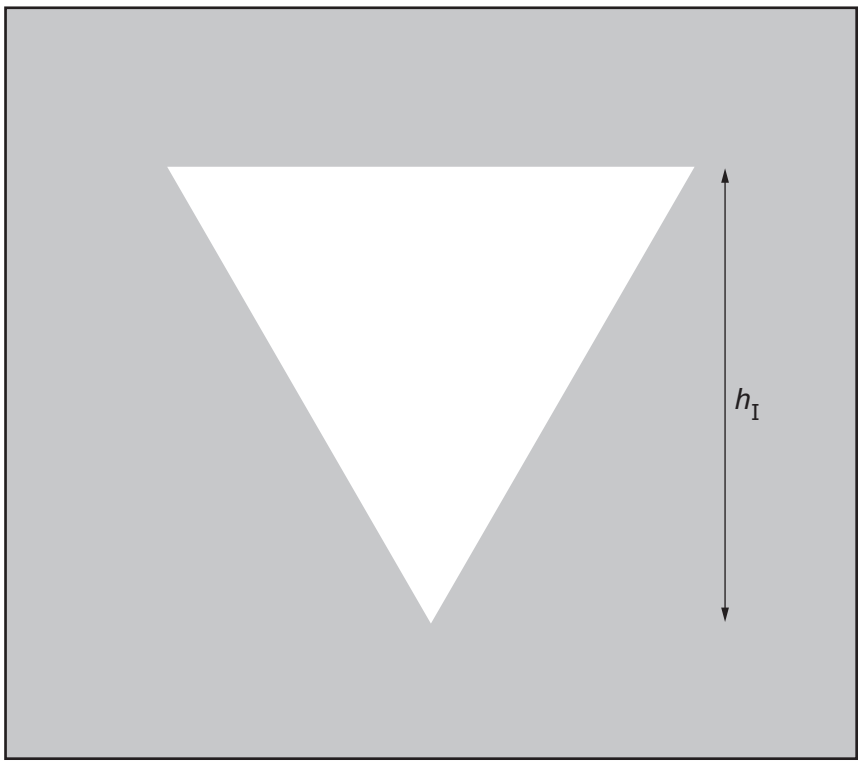

Fig. 3.2

Table 3.1

u/cm	h_I/cm	$D / \frac{1}{\text{cm}}$
20.0		
25.0	2.8	0.36
30.0	2.0	0.50
35.0	1.6	0.63
40.0	1.2	0.83

[1]

(ii) For distance u = 20.0 cm, calculate, and record in Table 3.1, a value D.
Use your value of h_I from Table 3.1 and the equation:

View solution

$$D = \frac{1}{h_I}.$$

[1]

(c) The student repeats the procedure for u = 25.0 cm, u = 30.0 cm, u = 35.0 cm and u = 40.0 cm.
His results are shown in Table 3.1.

View solution

Plot a graph of u / cm (y-axis) against $D / \frac{1}{\text{cm}}$ (x-axis). Start the axes at the origin (0,0).

Draw a best-fit straight line.

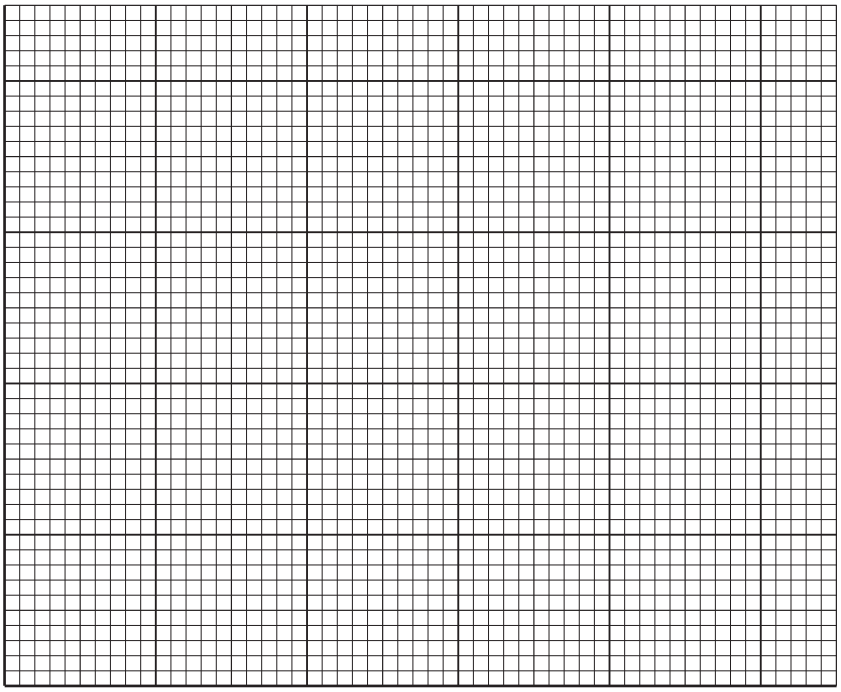

[4]

(d) (i) From your graph, determine u_0, the value of u when D is zero.

u_0 = ... cm [1]

(ii) Determine the gradient G of the graph.

View solution

Show clearly on the graph how you obtained the necessary information.

G = ... [1]

(e) The illuminated object is shown full size in Fig. 3.3.

View solution

Measure and record the height h_O of the illuminated triangular object shown in Fig. 3.3.

h_O = ... cm

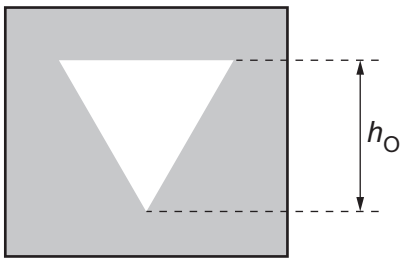

Fig. 3.3

Calculate the focal length f of the lens. Use your value of h_O, your value of G from **(d)(ii)** and the equation:

$$f = \frac{G}{h_O} \times k, \quad \text{where } k = 1.0\,\text{cm}^2.$$

f = ... cm [1]

(f) Describe **one** difficulty that can be experienced when measuring the height of the image in this experiment.

View solution

Suggest an improvement to overcome this difficulty.

difficulty .....

.....

improvement .....

.....

[1]

[Total: 11]

BLANK PAGE

4 A student investigates the evaporation of water in an open dish.

Plan an experiment which will enable the student to compare the effect on evaporation of using different diameters of dish.

View solution

The mass m_e of water evaporated can be determined by using the equation:

$$m_e = m_b - m_a$$

where m_b = the mass of water in the dish before experiment and
m_a = the mass of water in the dish after experiment.

The apparatus available includes:

- a range of shallow dishes with different diameters
- an adjustable laboratory lamp to heat the water
- a variable power supply for the lamp
- a stop-watch
- a supply of cold water.

You do **not** need to write about any safety precautions.

In your plan:

- list any additional apparatus needed
- explain briefly how to do the experiment, including what measurements need to be taken
- state the key variables to keep constant
- draw a table, or tables, with column headings, to show how to display the readings (you are **not** required to enter any readings in the table)
- explain how to use the readings to reach a conclusion.

You may draw a diagram or add to Fig. 4.1 if it helps to explain your plan.

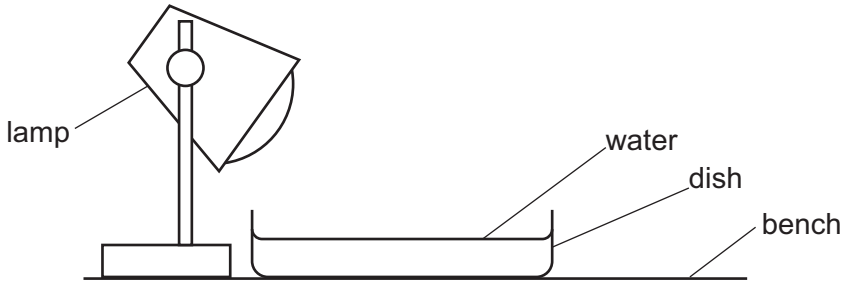

Fig. 4.1

© UCLES 2025

.....

.....

.....

.....

.....

.....

.....

.....

.....

.....

.....

.....

.....

.....

.....

.....

.....

.....

.....

.....

.....

..... [7]

BLANK PAGE

Permission to reproduce items where third-party owned material protected by copyright is included has been sought and cleared where possible. Every reasonable effort has been made by the publisher (UCLES) to trace copyright holders, but if any items requiring clearance have unwittingly been included, the publisher will be pleased to make amends at the earliest possible opportunity.

To avoid the issue of disclosure of answer-related information to candidates, all copyright acknowledgements are reproduced online in the Cambridge Assessment International Education Copyright Acknowledgements Booklet. This is produced for each series of examinations and is freely available to download at www.cambridgeinternational.org after the live examination series.

Cambridge Assessment International Education is part of Cambridge Assessment. Cambridge Assessment is the brand name of the University of Cambridge Local Examinations Syndicate (UCLES), which is a department of the University of Cambridge.

© UCLES 2025